WE MEET
@ DIGITAL DAYS



TRANSFORMER DESIGN FOR EMC-
PRACTICAL CONSTRUCTION TECHNIQUES

Tomás O'Brien
Magnetics Design Engineer-Europe
Tomas.OBrien@we-online.de

TRANSFORMER DESIGN FOR EMC- PRACTICAL CONSTRUCTION TECHNIQUES

- Transformers Impact on EMC
- What we should avoid
- Good EMC Design Practices
- Additional EMI reduction measures



TRANSFORMER'S PARASITICS

- **DC Resistance, Leakage Inductance and Inter/Intrawinding Capacitance**

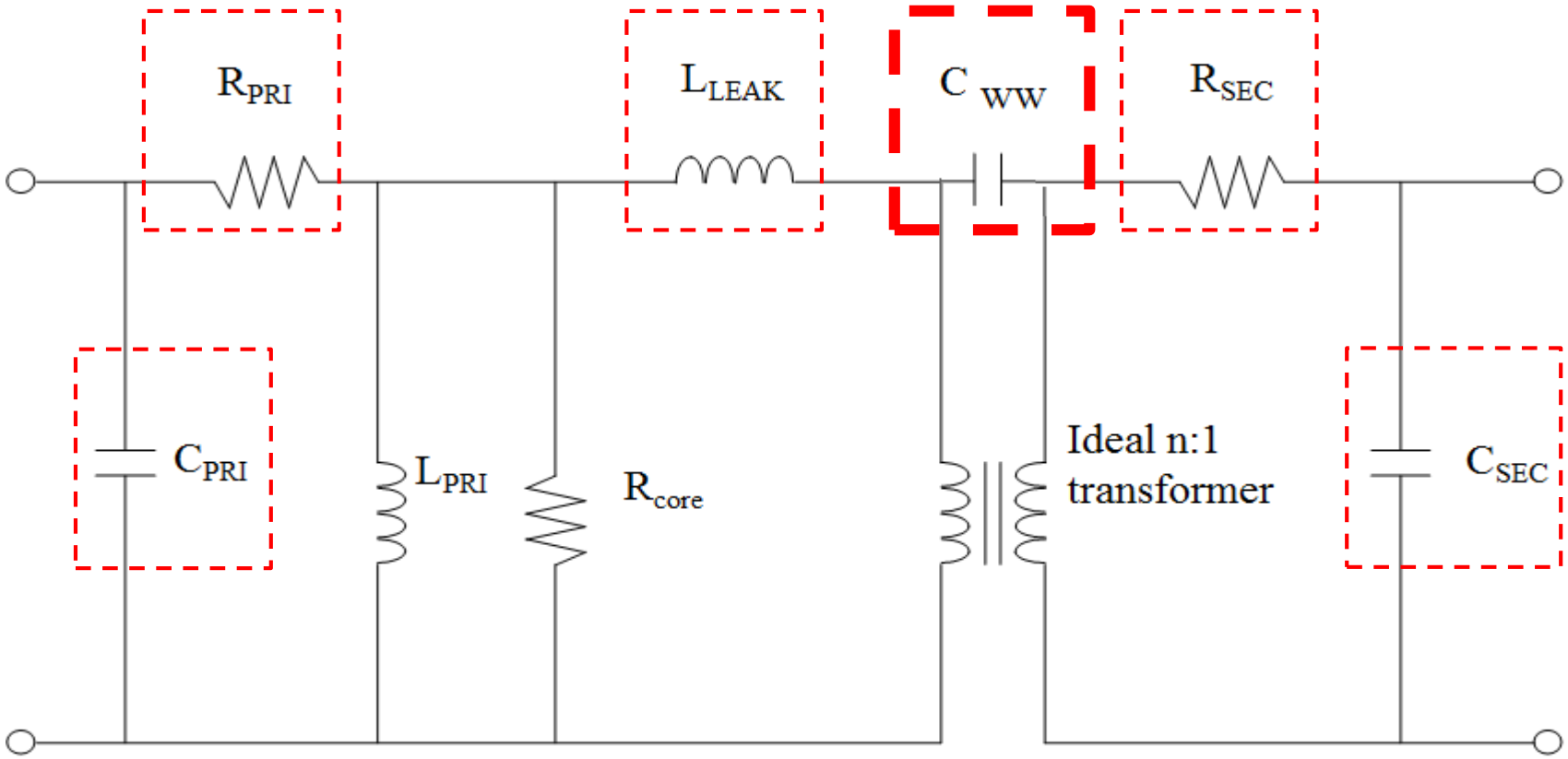

TRANSFORMER'S IMPACT ON EMI

150kHz-30MHz

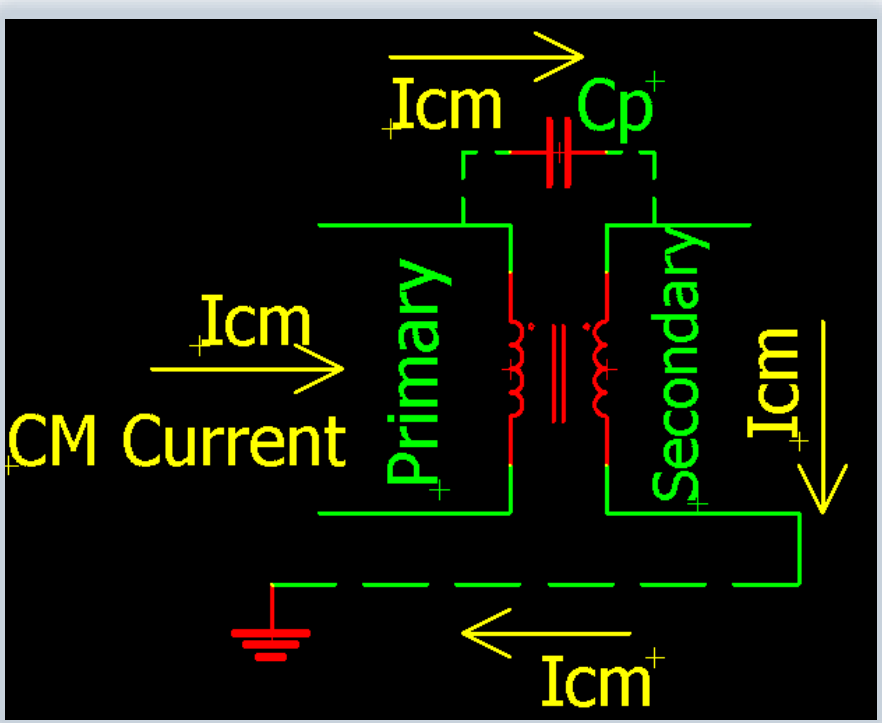

- **Conducted Emissions:** Path for Common Mode Noise to go from Primary to Secondary

30MHz+

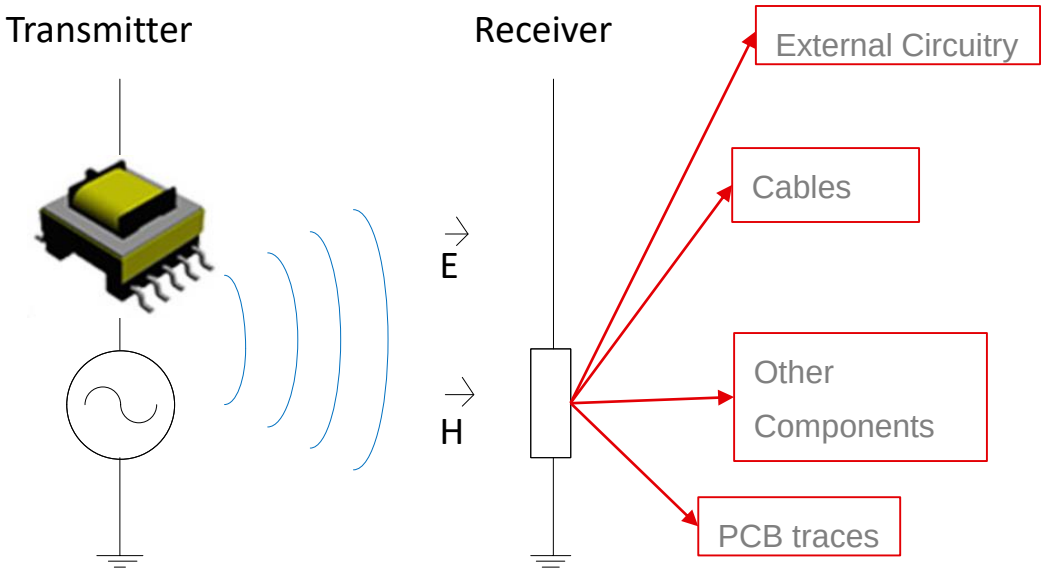

- **Radiated Emissions**: Coils of the transformer can act as antennas and radiate to surrounding circuitry and cables

CONDUCTED EMMISIONS: SWITCHING FREQUENCY HARMONICS

- **Conducted peaks show up at harmonics of the switching frequency**
- **Resonances in circuit cause peaks are higher frequencies**

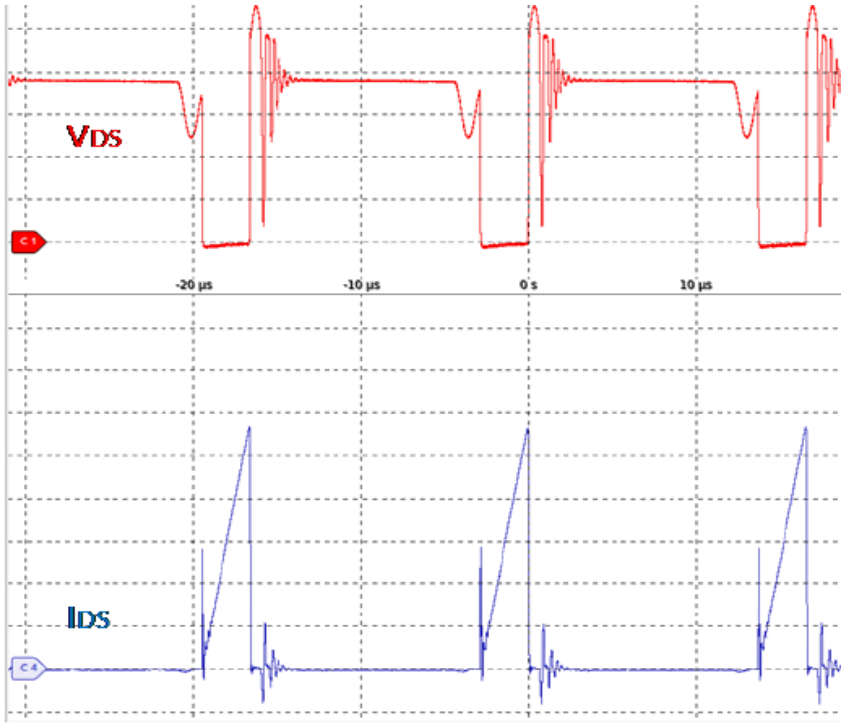

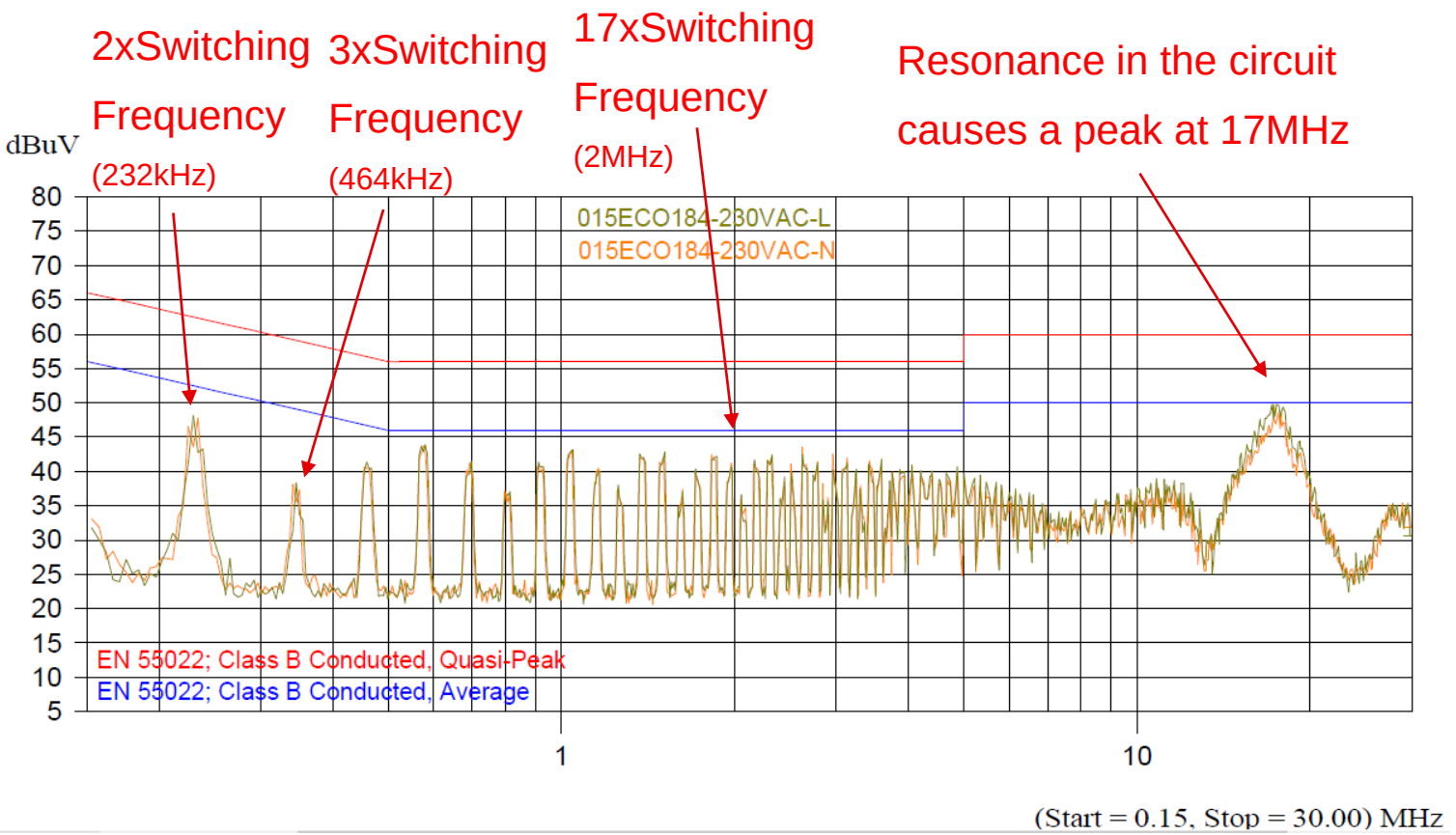

RADIATED: EMISSION DUE TO OSCILLATIONS

- **Ringing caused by parasitics on the PCB and within components**
- **This is radiated into cables and through the air and shows up as peaks in the Radiated emissions test.**

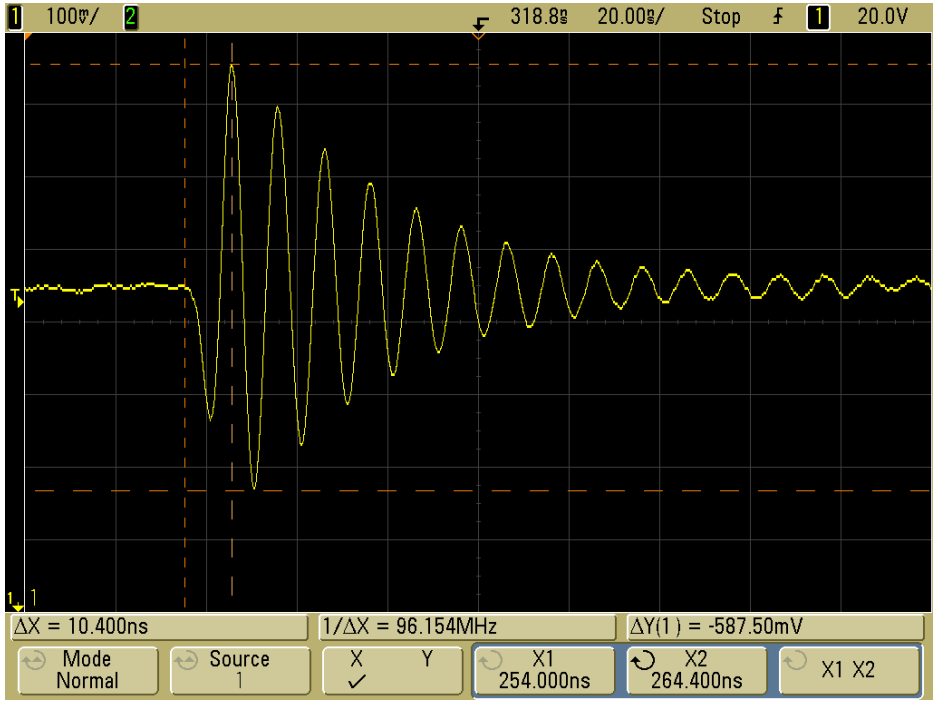

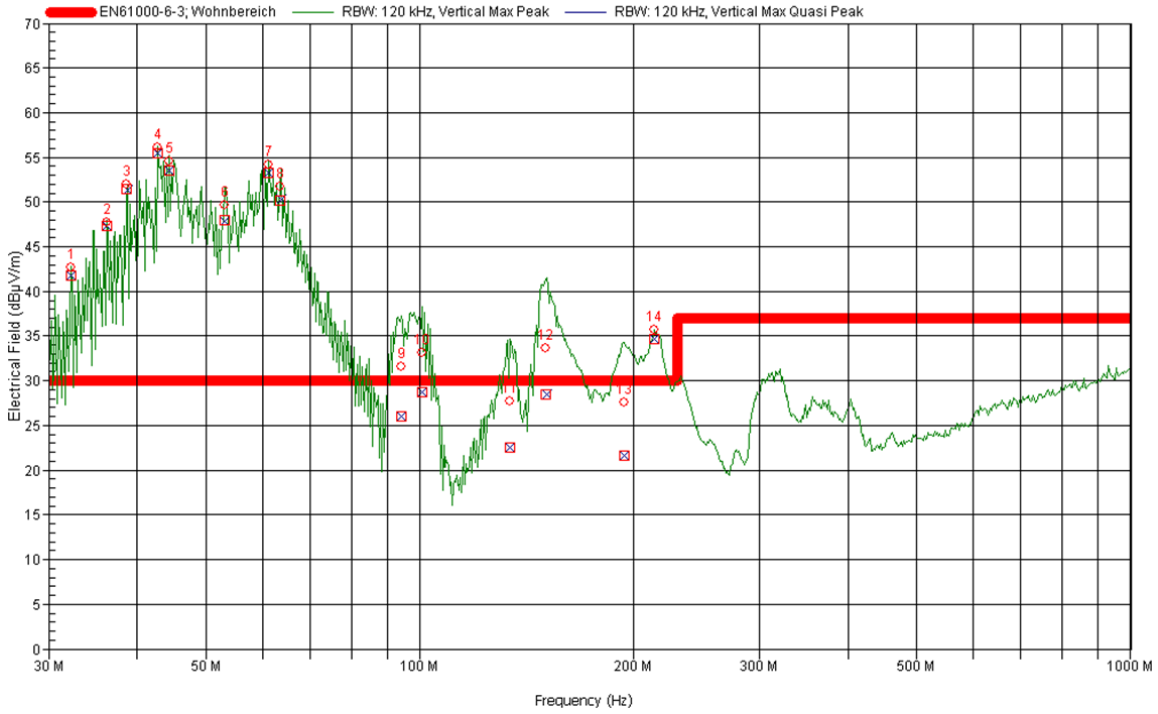

TRANSFORMERS EMI: FLYING LEADS

Flying Leads Make Great Antennas.

Enough Said!



TRANSFORMERS EMI – AVOID EI TYPE CORES

- EI Core Style
- Mylar or Tape Used for Gap
- Three Unshielded Gaps

Not a good solution

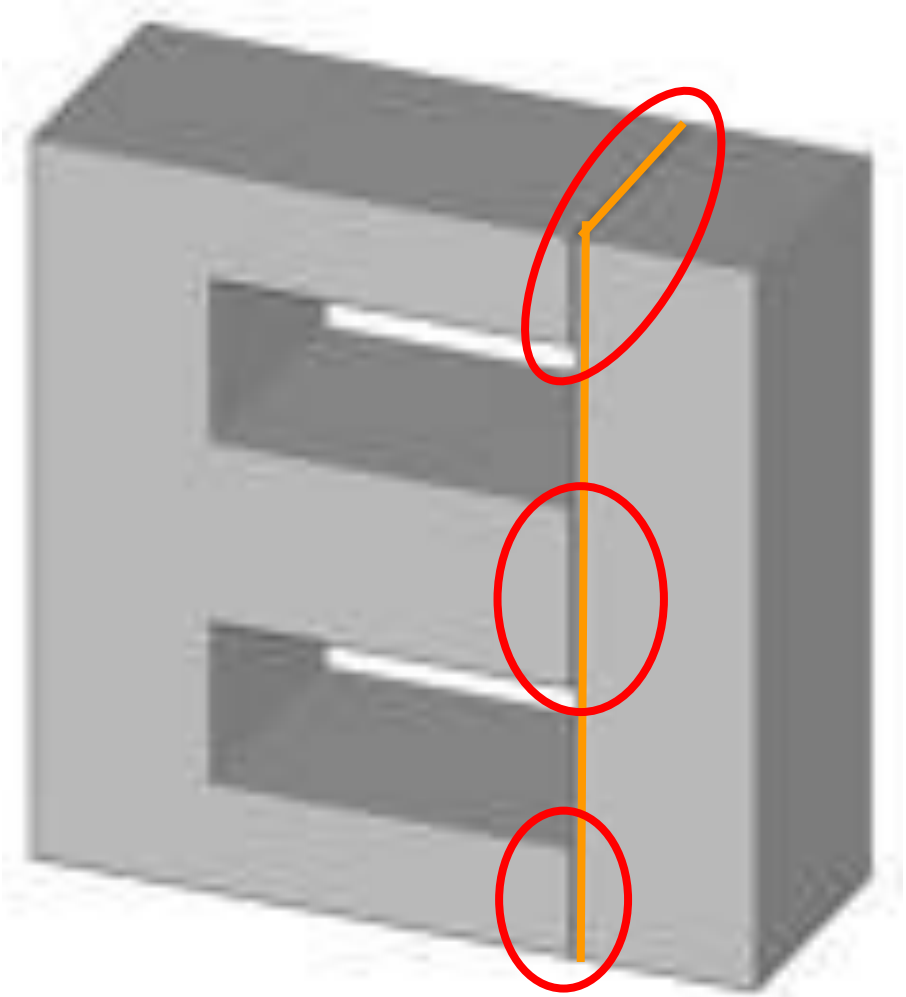

GOOD EMI DESIGN PRACTICE: AIRGAP

- **Center Leg Gap Only**
  - Windings Shield
- **No Gaps in Outer Legs**
  - Nothing to Shield

No Gaps Here

Gap Here

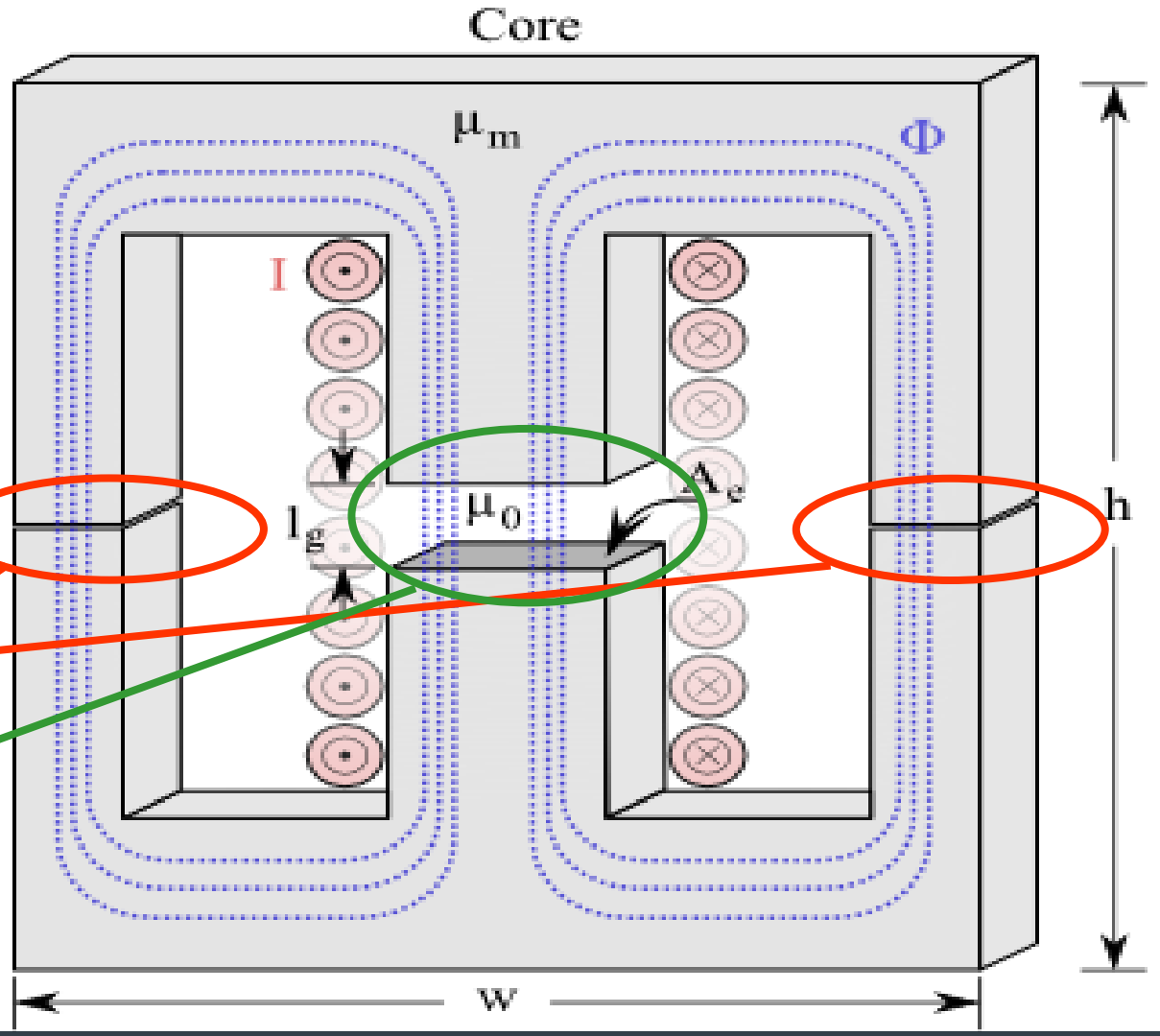

TRANSFORMERS FOR EMC - SMALL DESIGNS

How can Smaller Transformers help reduce EMI:

- **Build Smaller More Compact Transformers**
- **Smaller Transformers have less Parasitics**
  - Less Capacitance
  - Smaller Leads (i.e. Smaller Antennas)
  - Smaller Gaps
  - Less Leakage Inductance
- **Less Conducted and Less Radiated Noise**

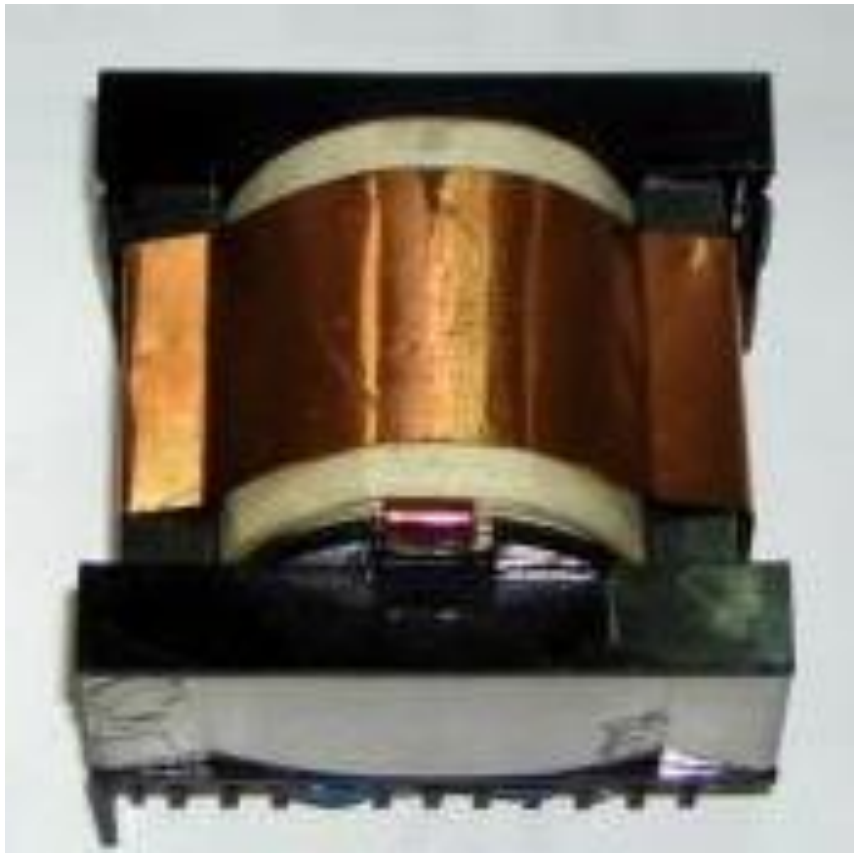

TRANSFORMER EMI: INTERWINDING CAPACITANCE

- **DC Resistance, Leakage Inductance and Inter/Intrawinding Capacitance**

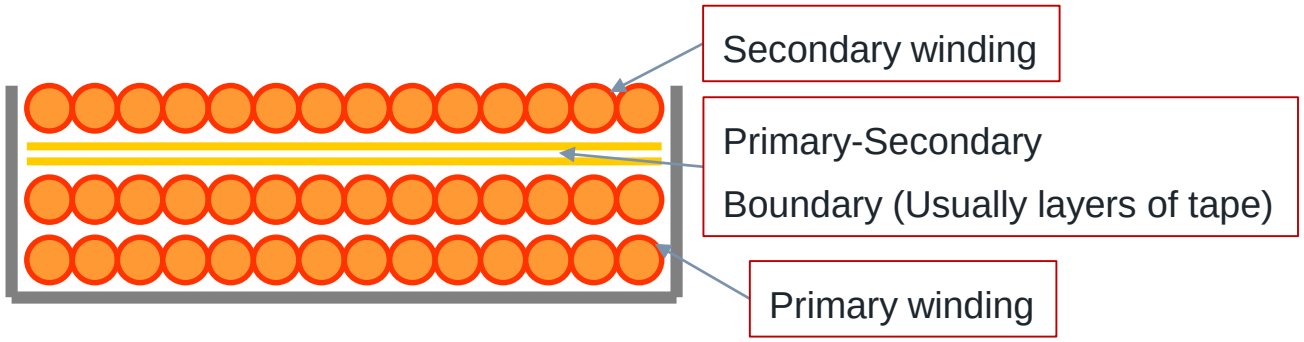

How Do We Reduce Capacitance?

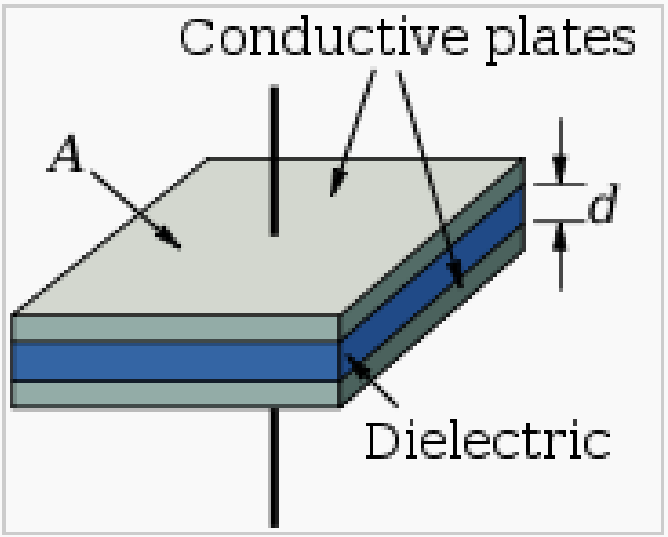

- **Multi-section or Narrow Bobbin**
  - Reduces Area (A) and Increases Distance
- **Lots of Tape & Increase Insulation Thickness on Wires**
  - Increases Distance (d)

! Careful: How is L_{lgk} Affected?

- **Reduce Dielectric Constants (Єr), How?**
  - Low dielectric Varnishes or Potting Compounds or None

    Bonus: Does Not Affect Leakage Inductance

$$C = \epsilon_r \epsilon_0 \frac{A}{d} \text{ (in SI units)}$$

GOOD EMI DESIGN PRACTICE

- **How does One Terminate a Multi-layer Primary?**
- **Terminate Start to Switch so Subsequent Layer/s Shield High dv/dt Windings from outside world.**

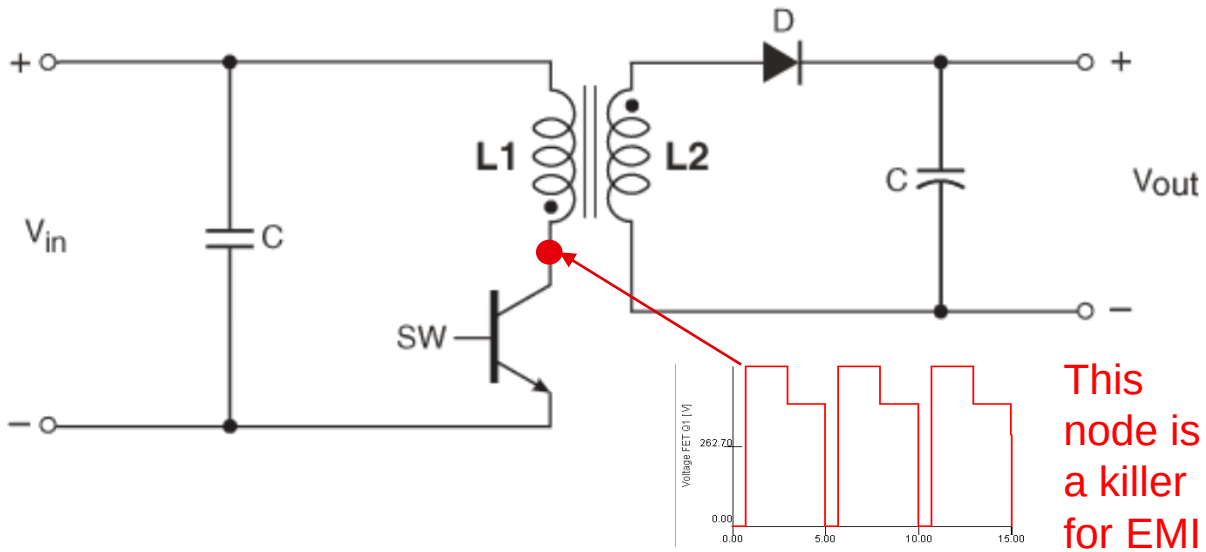

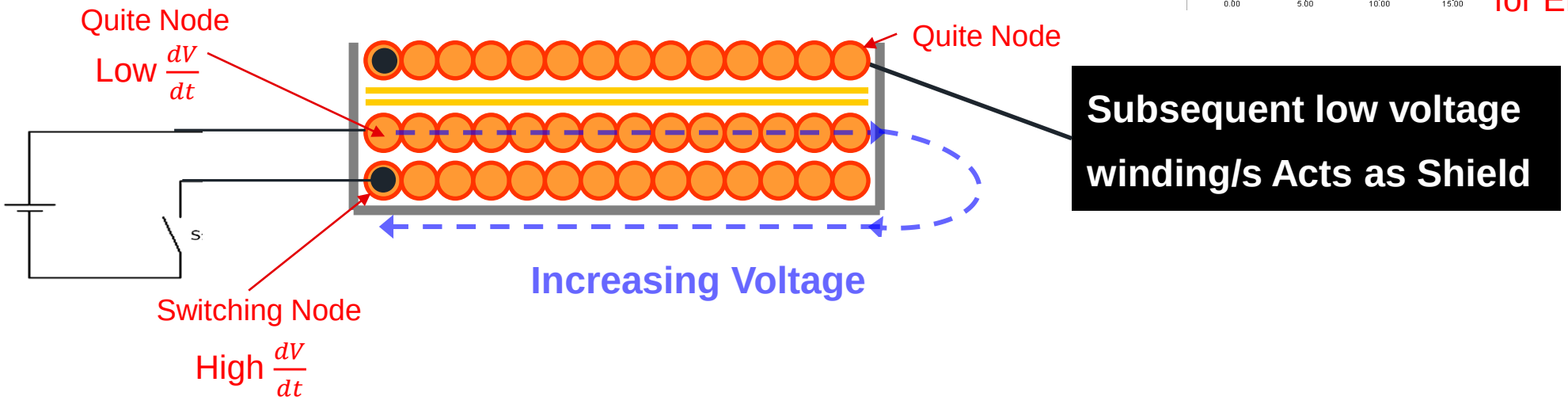

INTERNAL COPPER FOIL SHIELDING

- **Copper foil is ‘‘cuffed‘‘ with tape and connected to system ground or a quite node in the circuit**

  - ▲ Shields both conducted and radiated noise
  - ▲ Good results

  - ▼ Shield must be prepared - labor intensive
  - ▼ No auto winding possible



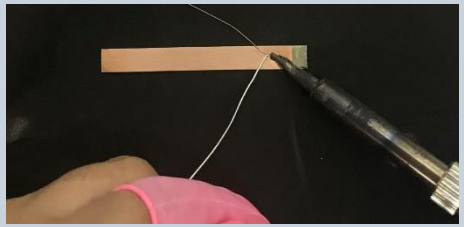

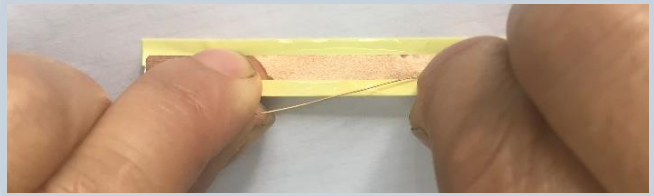

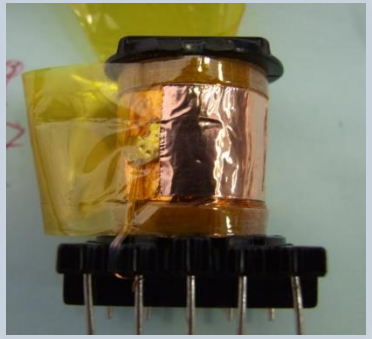

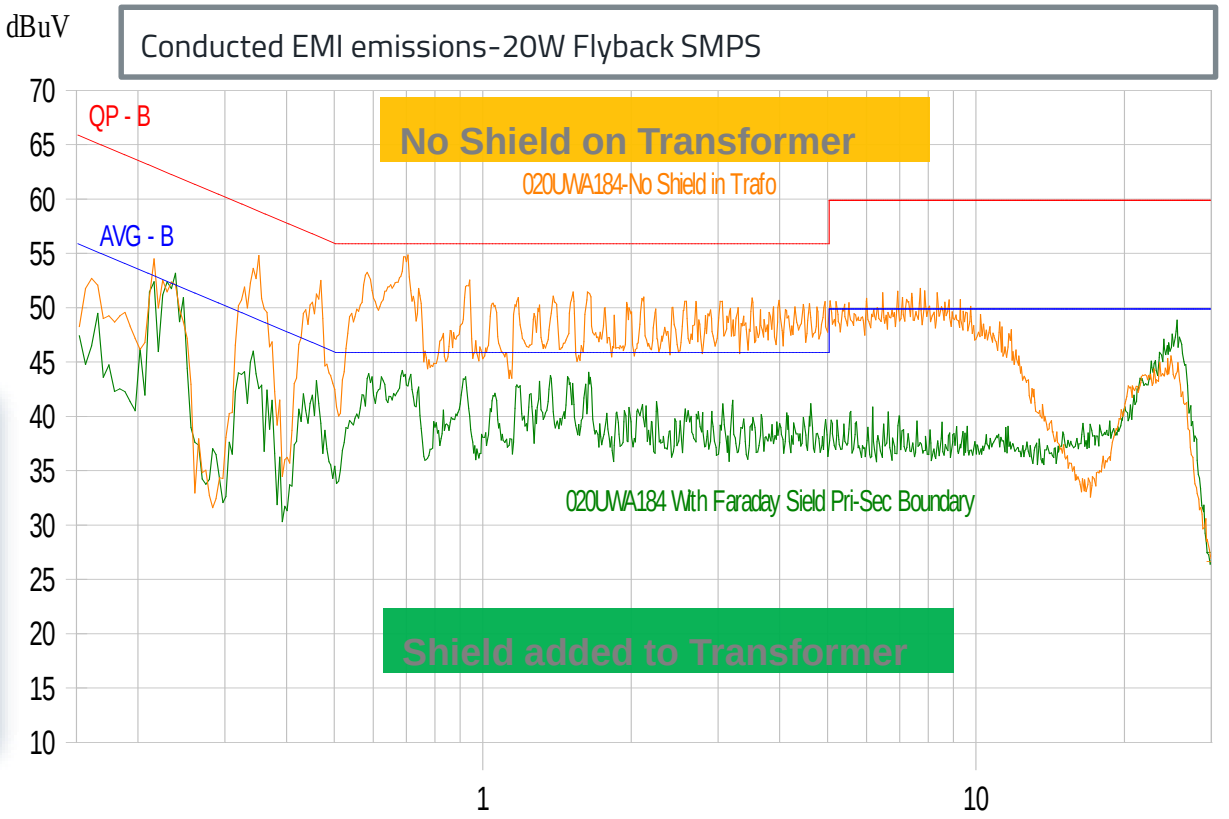

INTERNAL WIRE WOUND SHIELDING

- **Compact single layer, one end connected to pin and the other buried.**

  - ▲ Shields both conducted and radiated noise
  - ▼ Burying lead is a manual process

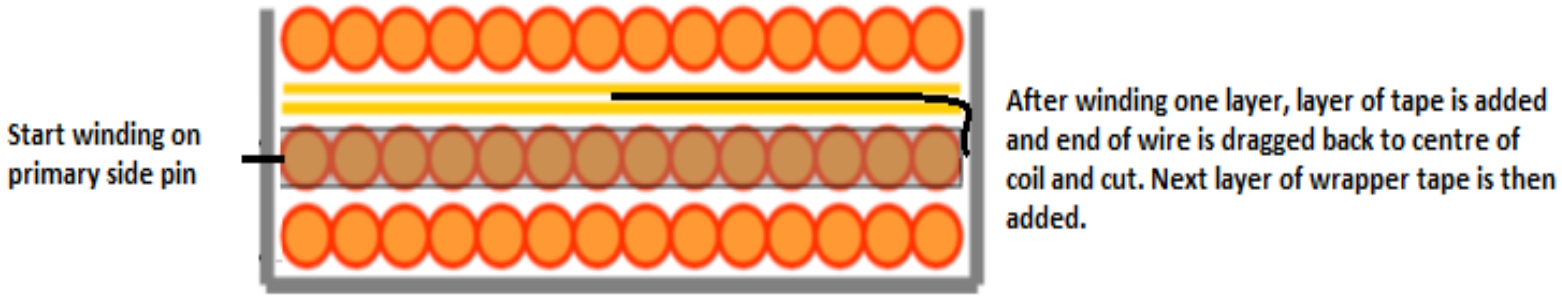

- **For automation (lower cost) both ends of wire shield should be terminated to a pin, can either be with dragback or on other bobbin rail if safety distance allows for this.**

  - ▲ Shields both conducted and radiated noise
  - ▲ Fully automatable

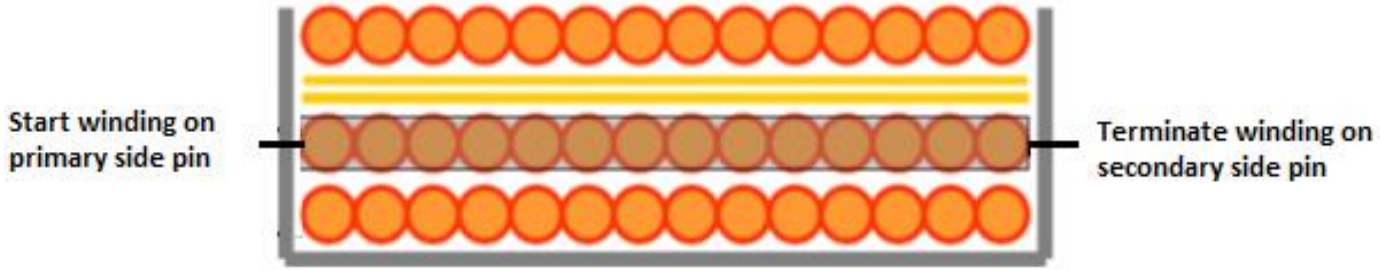

EXTERNAL SHIELDING - FLUX BAND

- **Copper foil is wrapped around coil and core and left floating or grounded**



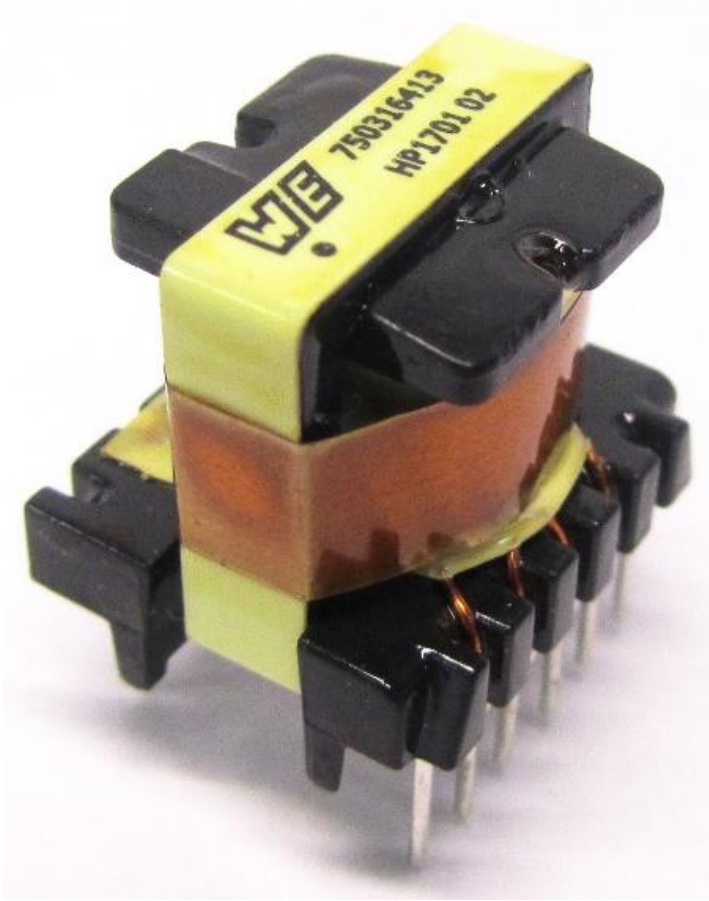

▲ Can be added after system level EMC test

▼ Shields radiated noise only
▼ Usually more expensive than internal wire wound shield
▼ Can increase transformer temperature

EXTERNAL SHIELDING – CORE GROUNDING

- **Flying lead (19) connected to copper foil (20) and connected to core using a conductive adhesive. Can then be connected to system ground**

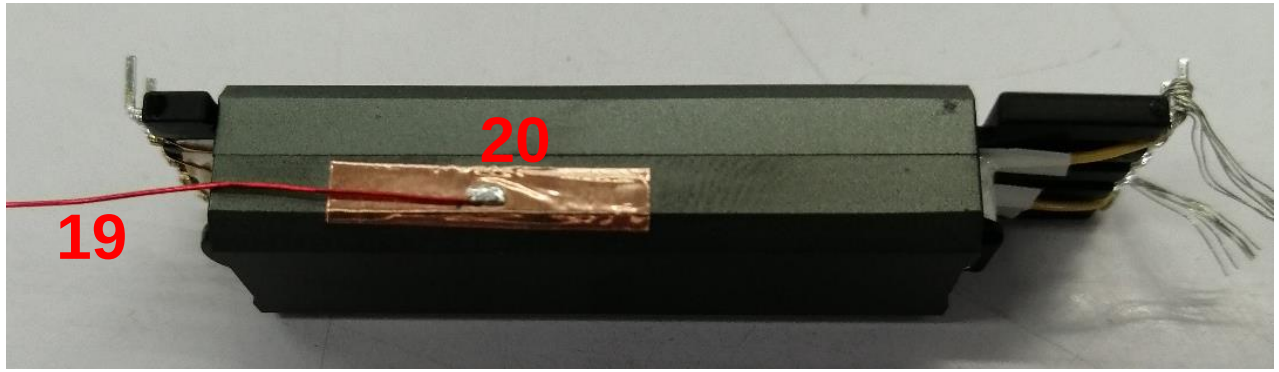

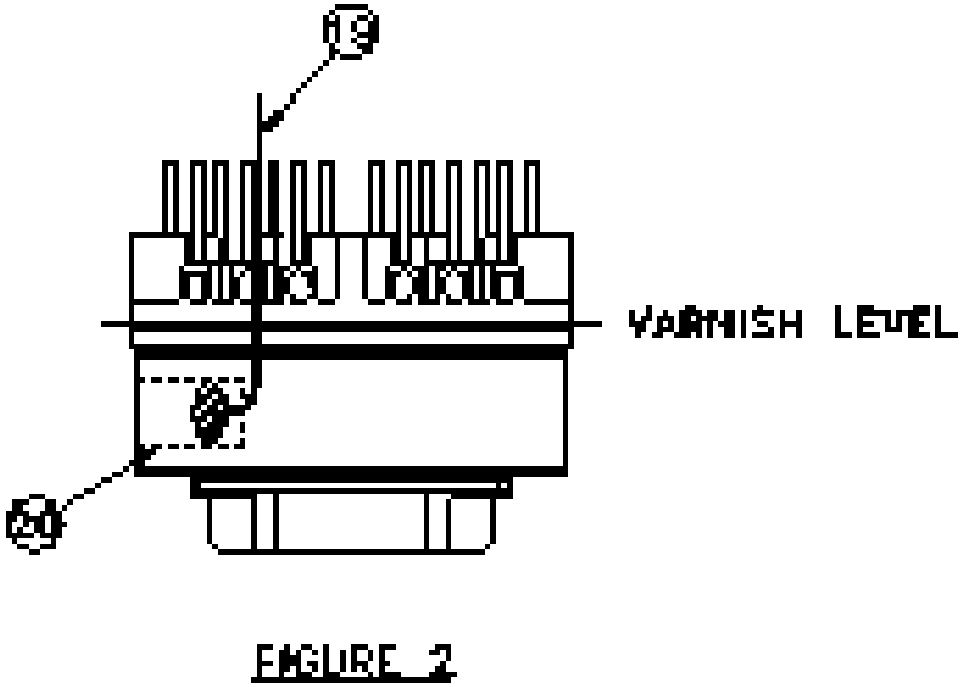

FIGURE 2

▲ Can be added to existing transformer if required after EMC test

▲ Good results seen compared to flux band solution

▼ Expensive compared to internal wire wound shield

EXTERNAL SHIELDING – CAP

- **EFD 20 with external shield**

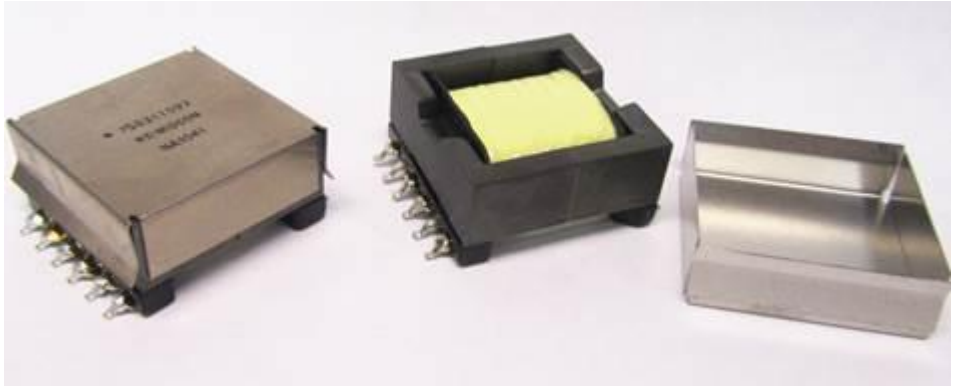

▲ Easy to assemble
▲ Can be added after design

▼ Shielding function only secondary (primary purpose pick and place)
▼ May impact safety distances

- **Clips with solder tabs can be connected to system GND on PCB**

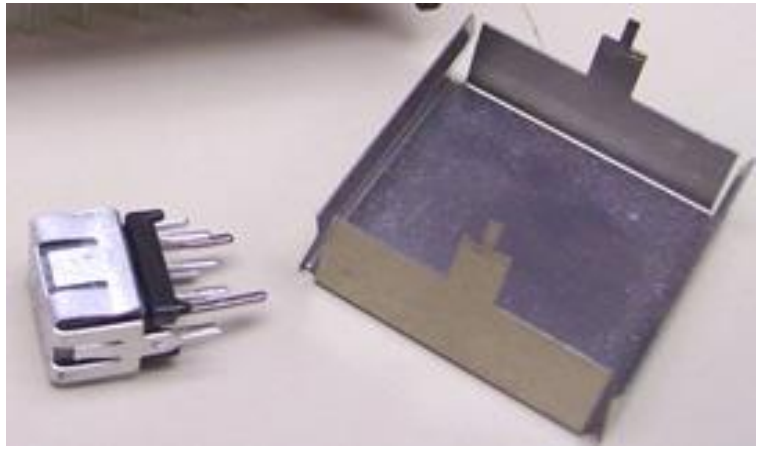

▲ Very good contact with core
▲ Strong ground connection for core and shield

▼ Limited availability
▼ Expensive

EXTERNAL SHIELDING – CLOSED CORE

- **EP7 enclosed core provides shielding properties due to closed core**

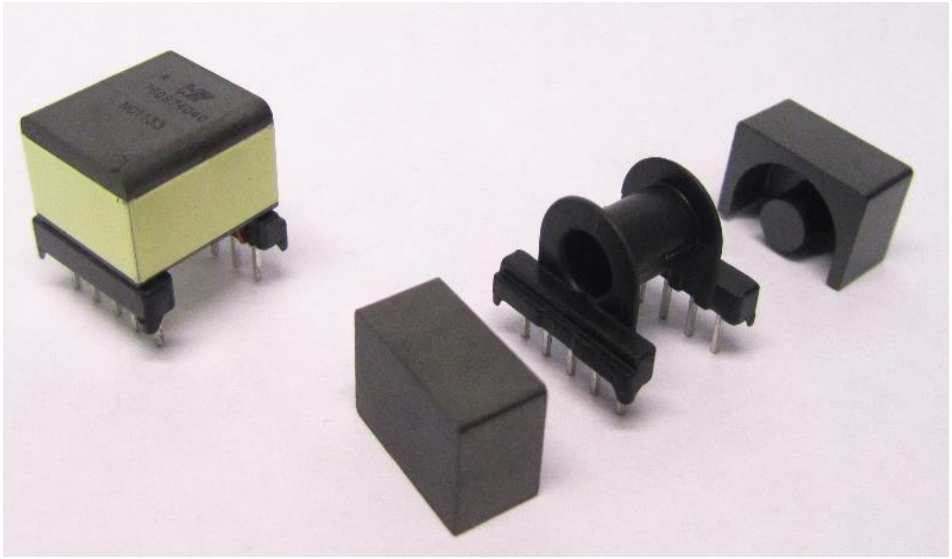

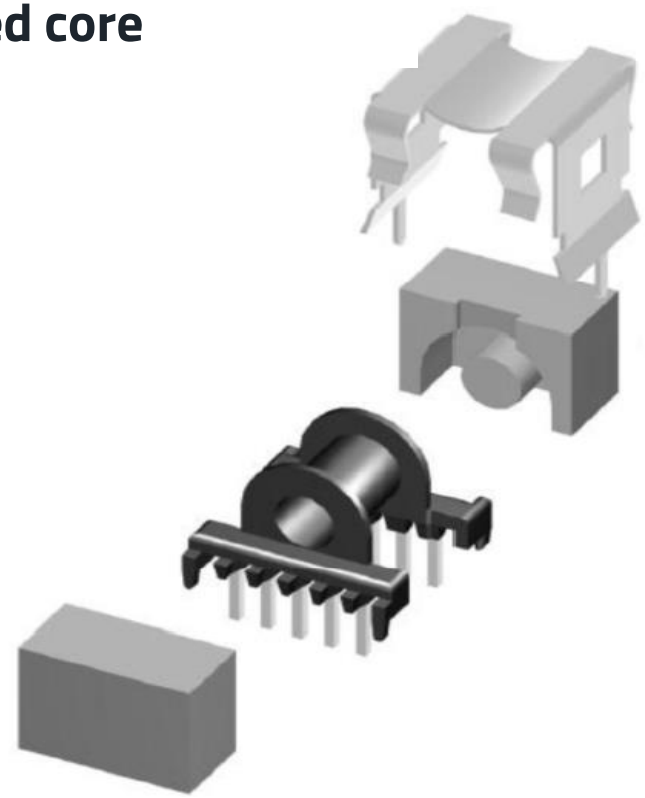

- ▲ Little to no cost adder
- ▲ Built in solution

- ▲ Can imporove by adding a clip with solder tabs
- ▼ But these clips have limited availability and add cost

