ICCS CAN I/O SEALED

Controllers

The **ICCS CAN I/O sealed** module is designed to operate in extreme environmental conditions. It achieves IP68 protection by encapsulating the electronics in a compact plastic housing with sealed connectors. The system is capable of reading digital signals, analogue voltages and currents as input data for processing. Four proportional valves can be controlled using pulse width modulated (PWM) outputs, with valve current monitored and controlled by an integrated current sensing system. In addition, two PWM and two digital outputs are available, with output current feedback provided by high-side current sensing.

Technical data

General information	
Housing	Waterproof plastic housing with connector
Connector	Delphi / Aptiv 211 PL249S0033
Dimensions	95 x 77.3 x 33.5 mm
Weight	~170 g
Operating temperature	-40 °C to 85 °C (no full load at 85 °C)
Storage temperature	-40 °C to 85 °C
Ingress protection	IP6K6 and IP6K8
EMC	E1
Operating voltage Vsupply	9-30 V DC
Pre-fusing	2 x 10 A
Overvoltage protection	> 33 V
Reverse polarity protection	Yes
Current consumption	30 mA
Quiescent current	<1 mA
Processor type	Freescale HCS08
Clock frequency	40 MHz
Flash memory	60 kB
RAM	4 kB
EEPROM	1 kB available for graphical programming

CAN bus	
acc. ISO 11898-2	High speed
acc. CAN 2.0 B	29 Bits extended address identifier
acc. CAN 2.0 A	11 Bits address identifier
Baud rate	60 kBit/s to 1000 kBit/s (125 kBit/s default value)

Inputs / outputs overview

Qty	I/O type	Description
6	Analogue inputs	Pull-up/down adjustable via software
2	Digital inputs	(ID & KL15) KL15 Wake-up Input
2	Analogue inputs or digital outputs	Integrated power measurement adjustable if pin programmed as an output
4	Analogue inputs or PWM outputs	High side power measurement possible if pin programmed as an output
2	Analogue inputs or PWM outputs	Integrated power measurement adjustable if pin programmed as an output

Inputs / outputs details	
Analogue inputs	
Input Voltage max	Vsupply
Measuring range	0–11.3 V DC
Resolution	12 Bit
Input resistance	22.6 kΩ / 33.68 kΩ on KL 30
Pull-up resistance	10 kΩ switchable via software
Pull-down resistance	0.5 kΩ switchable via software
Input frequency	max. 70 Hz
Digital inputs	
Input voltage max	Vsupply
Switch-on level	7 V DC
Switch-off level	4.5 V DC
Input resistance	15 kΩ
Input frequency	max 70 Hz
Digital outputs	
Load current / Duty cycle	2.5 A / Double switching current for max 5 minutes
Protection	freewheeling diode
PWM outputs	
PWM frequency	max 500 Hz
Duty cycle	0...1000 %
Resolution	Depends on frequency
Load current / Overload resistance	1.5 A / Double switching current for max 5 minutes
Protection	freewheeling diode

*Every analogue input is also usable as a digital input in the programming software

Hardware map

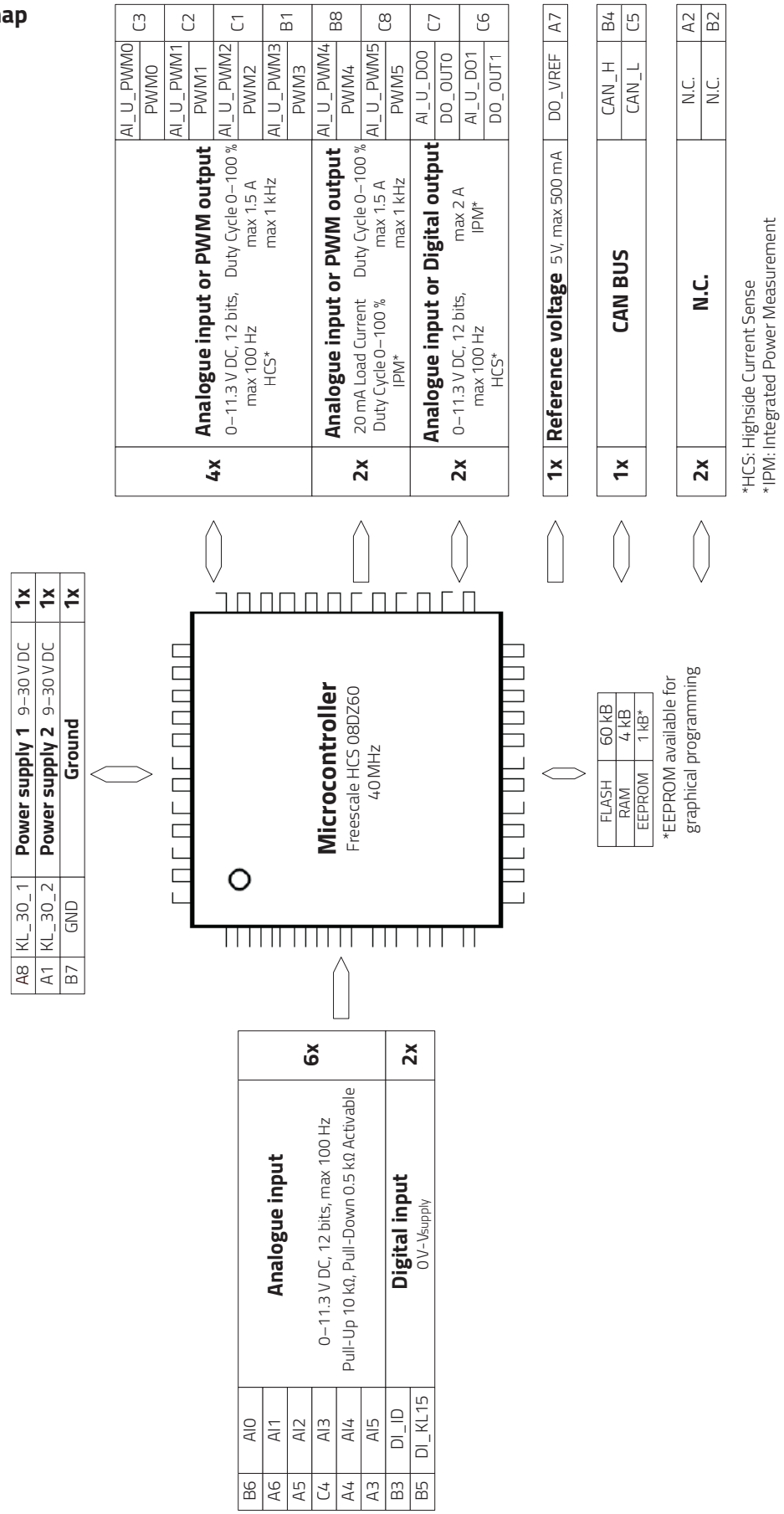

Pin assignment

Connector ICCS CAN I/O sealed		
Pin	**Description**	**Function**
A1	KL30_2	Power supply for B1, C1, C2, C3 / Analogue input
A2	–	Option / N.C.
A3	AI5	Analogue input 0–10 V DC
A4	AI4	Analogue input 0–10 V DC
A5	AI2	Analogue input 0–10 V DC
A6	AI1	Analogue input 0–10 V DC
A7	VREF_OUT	Vref output (optional)
A8	KL30_1	Power supply for B8, C6, C7, C8 / Analogue input
B1	PWM3	PWM output
	AI_U_PWM3	Analogue input 0–10 V DC
B2	–	Option / N.C.
B3	DI_ID	Ident-Pin Digital input
B4	CAN_H	CAN Bus High
B5	KL15	Digital input
B6	AI0	Analogue input 0–10 V DC
B7	GND	Ground KL 31
B8	PWM4	PWM output
	AI_U_PWM4	Analogue input 0–10 V DC
C1	PWM2	PWM output
	AI_U_PWM2	Analogue input 0–10 V DC
C2	PWM1	PWM output
	AI_U_PWM1	Analogue input 0–10 V DC
C3	PWM0	PWM output
	AI_U_PWM0	Analogue input 0–10 V DC
C4	AI3	Analogue input 0–10 V DC
C5	CAN_L	CAN Bus Low
C6	DO_OUT1	Digital output
	AI_U_PWM7	Analogue input 0–10 V DC
C7	DO_OUT0	Digital output
	AI_U_PWM6	Analogue input 0–10 V DC
C8	PWM5	PWM output
	AI_U_PWM5	Analogue input 0–10 V DC

Pinout of the connector

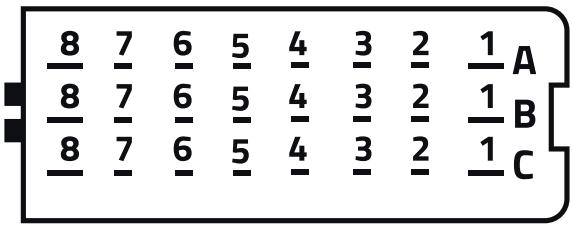

Dimensions

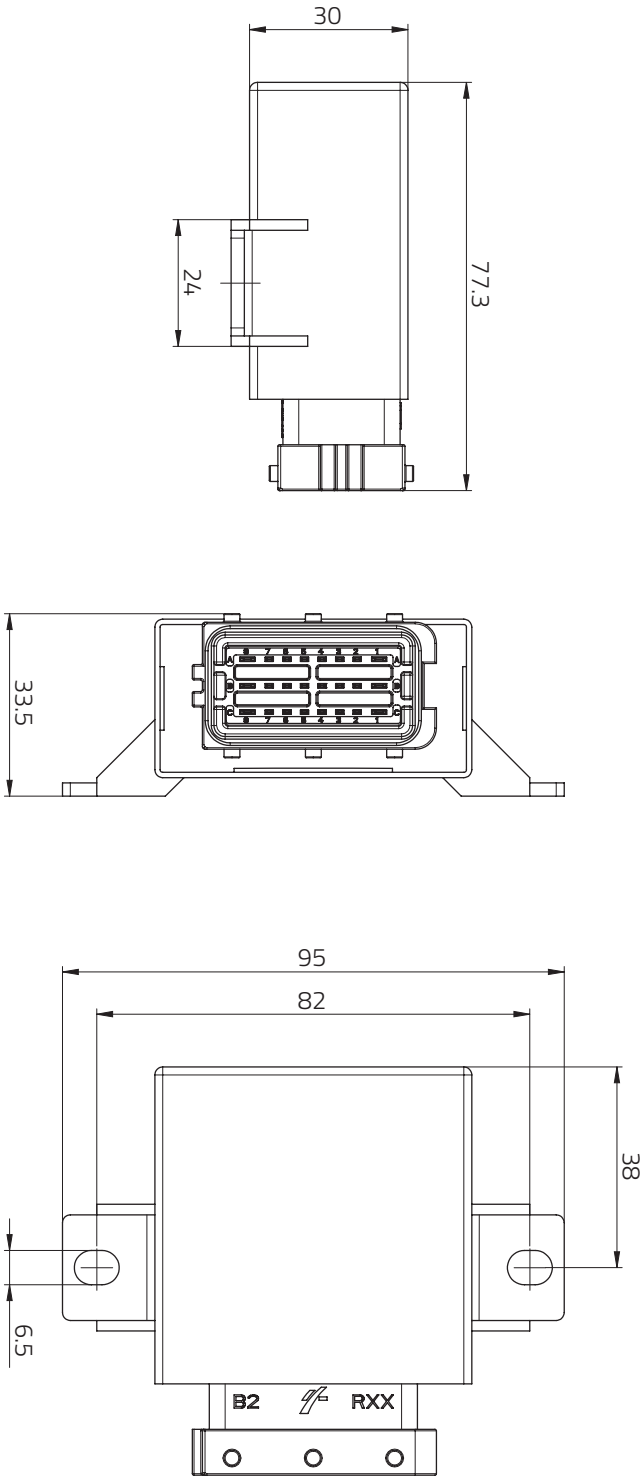

Order information

Available references	Part number WE ICS
ICCS CAN I/O sealed V2	ICS-104979

Mating connector	Part number FCI
Housing: FCI SICMA: 24 Pins (18 x 1.5mm + 6 x 2.8mm), female	211 PC249S0033
FCI Locking cam	211 A247 001
Terminals: SICMA-3 1.5 terminal female, 0.34...0.75 mm²	211 CC2S1160
Terminals: SICMA-3 1.5 terminal female, 1.00...2.00 mm²	211 CC2S2160
Terminals: SICMA-3 2.8 terminal female, 0.35...0.75 mm²	211 CC3S1160
Terminals: SICMA-3 2.8 terminal female, 1.00...2.50 mm²	211 CC3S2160
Plug seals for unused contact chambers	210 A015019

For more information write us an e-mail **ics@we-online.com**, call **+49 7940 9810-0** or visit us at **www.we-online.com/ics**

Würth Elektronik ICS GmbH & Co. KG
Intelligent Power & Control Systems
Gewerbepark Waldzimmern · Würthstraße 1
74676 Niedernhall · Germany
Tel.: +49 7940 9810-0 · Fax +49 7940 9810-1099
ics@we-online.com · www.we-online.com/ics

This item is a standard product, please consider the relevant datasheet notes. The user is responsible for the product's functionality in its purposed system environment. Technical content may be modified and changed by Wurth Elektronik ICS GmbH & Co. KG without any notice.