Dimensions: [mm]

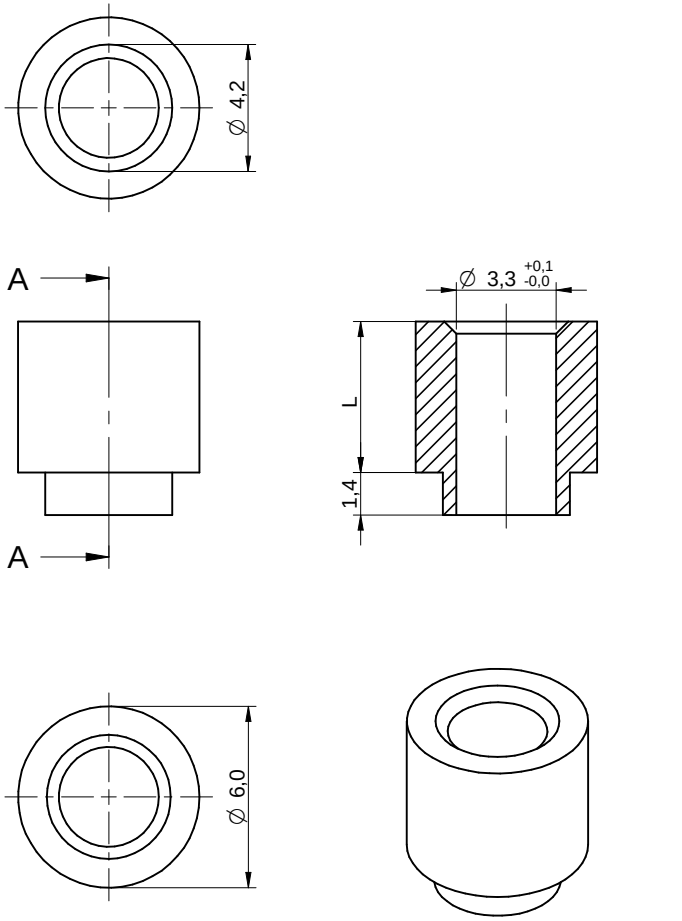

Scale - 4:1

Recommended Land Pattern: [mm]

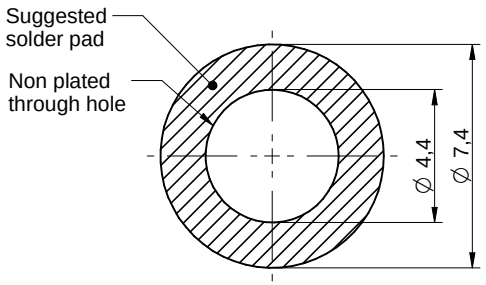

Scale - 4:1

Stencil Suggestion:

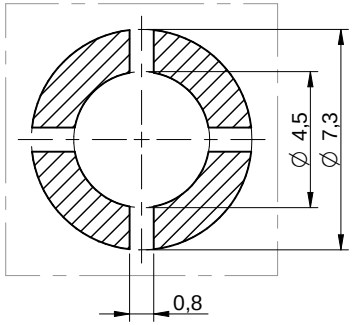

Properties:

Properties	Value	Unit	Tol.
Material	Steel		
Surface	Tin		
Solder Cream Thickness	150	µm	min.

Certification:

RoHS Approval	Compliant [2011/65/EU&2015/863]
REACh Approval	Conform or declared [(EC)1907/2006]
Halogen Free	Conform [IEC 61249-2-21]
Halogen Free	Conform [JEDEC JS709B]

General Information:

Operating Temperature	-55 °C up to +150 °C
Storage Conditions (in original packaging)	5 °C up to 40 °C; < 75 % rH
Moisture Sensitivity Level (MSL)	1
In Tape & Reel Packaging **no Polyimide Tape** is fixed on the top of the spacer.	

Article Properties:

Properties		Value	Unit	Tol.
Length	L	6	mm	±0.1mm

RoHS COMPLIANT · REACh COMPLIANT · HALOGEN FREE

WÜRTH ELEKTRONIK MORE THAN YOU EXPECT

Würth Elektronik eiSos GmbH & Co. KG
EMC & Inductive Solutions
Max-Eyth-Str. 1
74638 Waldenburg
Germany
Tel. +49 (0) 79 42 945 - 0
www.we-online.com
eiSos@we-online.com

CHECKED	REVISION	DATE (YYYY-MM-DD)	GENERAL TOLERANCE	PROJECTION METHOD
KGa	001.002	2025-12-31	DIN ISO 2768-1m	

DESCRIPTION
WA-SMST SMT Steel Spacer with through hole

ORDER CODE
9774060960RX

SIZE/TYPE	BUSINESS UNIT	STATUS	PAGE
Ø3.3	eiCan	Valid	1/5

This electronic component has been designed and developed for usage in general electronic equipment only. This product is not authorized for use in equipment where a higher safety standard and reliability standard is especially required or where a failure of the product is reasonably expected to cause severe personal injury or death, unless the parties have executed an agreement specifically governing such use. Moreover Würth Elektronik eiSos GmbH & Co KG products are neither designed nor intended for use in areas such as military, aerospace, aviation, nuclear control, submarine, transportation, transportation signal, disaster prevention, medical, public information network etc.. Würth Elektronik eiSos GmbH & Co KG must be informed about the intent of such usage before the design-in stage. In addition, sufficient reliability evaluation checks for safety must be performed on every electronic component which is used in electrical circuits that require high safety and reliability functions or performance.

Packaging Specification - Tape: [mm]

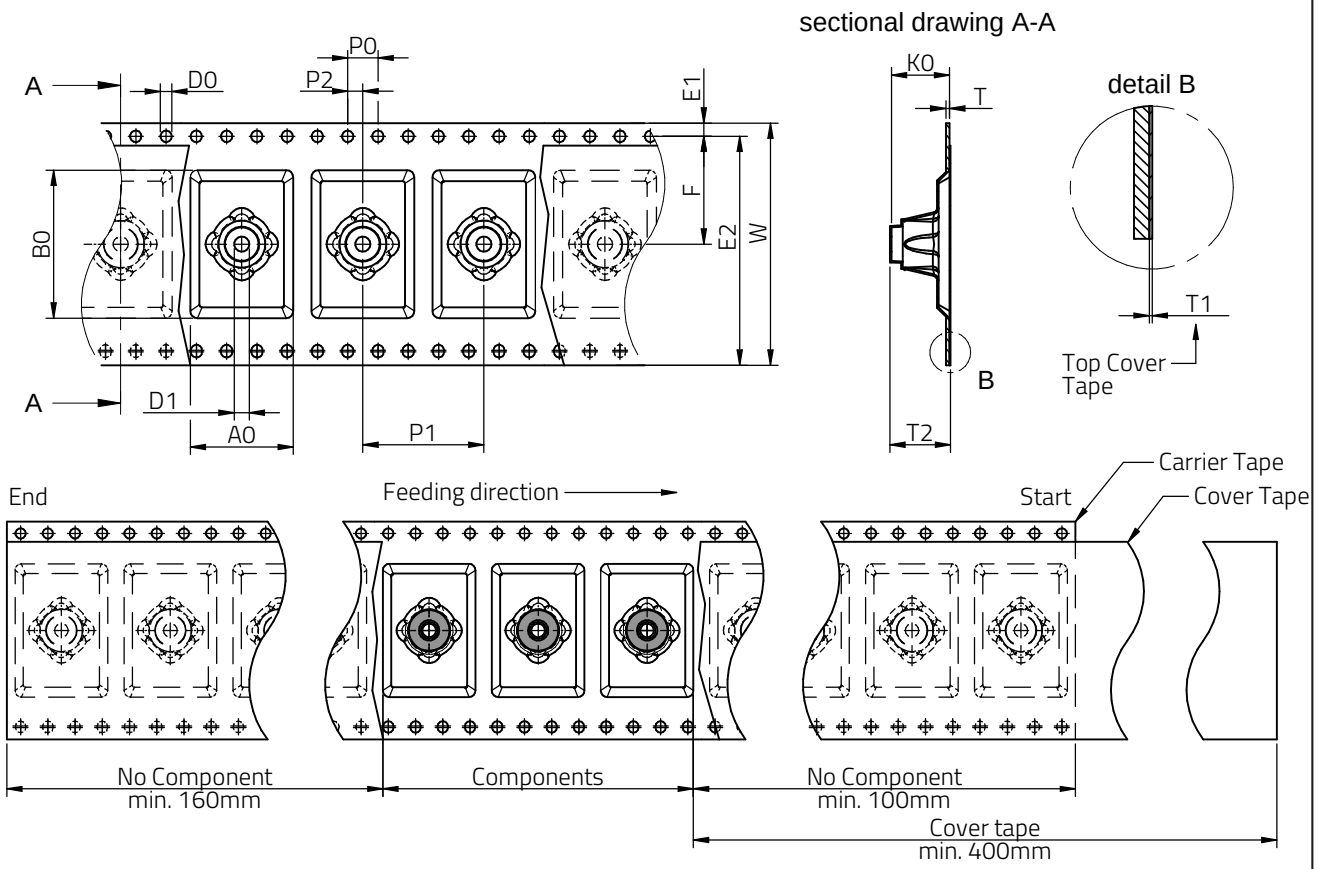

Packaging is referred to the international standard **IEC 60286-3:2019**

A0	B0	W	T	T1	T2	K0	P0	P1	P2	D0	D0 / 2	D1	d	E	S	F	Tape type 3	Packaging unit
typ.	typ.	±0,3	ref.	max.	typ.	typ.	±0,1	±0,1	±0,1	+0,1/ -0,0	+0,05/ -0,0	min.	±0,05	±0,1	±0,1	±0,1		pcs.
13,60	19,70	32,0	0,50	0,10	8,00	7,70	4,00	16,00	2,00	1,50	0,75	2,00	0,20	1,75	28,40	14,20	Polystyrene	550

Packaging Specification - Reel: [mm]

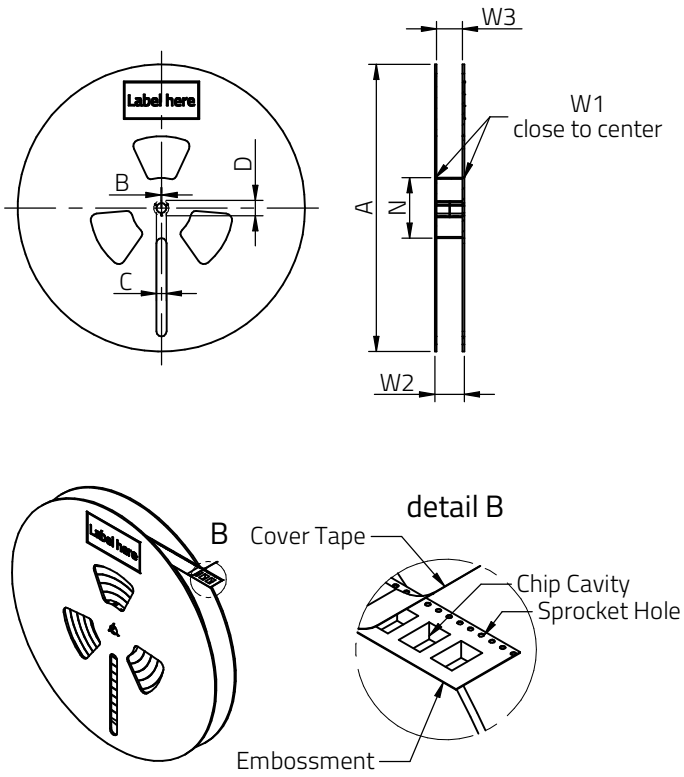

	A (mm)	B (mm)	C (mm)	D (mm)	N (mm)	W1 (mm)	W2 (mm)	W3 (mm)	W3 (mm)	Material
Tolerance	± 2.0	min.	min.	min.	min.	+ 2.0	max.	min.	max.	
Value	330.00	1.50	12.80	20.20	60.00	24.40	30.40	23.90	27.40	Polystyrene

Packaging		
R	**RR**	**RX**
Tape & Reel, Polyimide Tape **with** flap	Tape & Reel, round Polyimide Tape	Tape & Reel, without Polyimide Tape

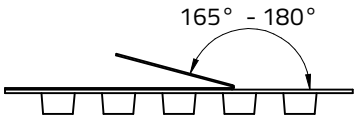

	Pull-off force
Tape width **24 mm**	0.1 N - 1.3 N

RoHS COMPLIANT · REACh COMPLIANT · HALOGEN FREE

WÜRTH ELEKTRONIK MORE THAN YOU EXPECT

Würth Elektronik eiSos GmbH & Co. KG
EMC & Inductive Solutions
Max-Eyth-Str. 1
74638 Waldenburg
Germany
Tel. +49 (0) 79 42 945 - 0
www.we-online.com
eiSos@we-online.com

CHECKED	REVISION	DATE (YYYY-MM-DD)	GENERAL TOLERANCE	PROJECTION METHOD
KGa	001.002	2025-12-31	DIN ISO 2768-1m	

DESCRIPTION
WA-SMST SMT Steel Spacer with through hole

ORDER CODE
9774060960RX

SIZE/TYPE	BUSINESS UNIT	STATUS	PAGE
Ø3.3	eiCan	Valid	2/5

This electronic component has been designed and developed for usage in general electronic equipment only. This product is not authorized for use in equipment where a higher safety standard and reliability standard is especially required or where a failure of the product is reasonably expected to cause severe personal injury or death, unless the parties have executed an agreement specifically governing such use. Moreover Würth Elektronik eiSos GmbH & Co KG products are neither designed nor intended for use in areas such as military, aerospace, aviation, nuclear control, submarine, transportation, transportation signal, disaster prevention, medical, public information network etc.. Würth Elektronik eiSos GmbH & Co KG must be informed about the intent of such usage before the design-in stage. In addition, sufficient reliability evaluation checks for safety must be performed on every electronic component which is used in electrical circuits that require high safety and reliability functions or performance.

Classification Reflow Profile for SMT components:

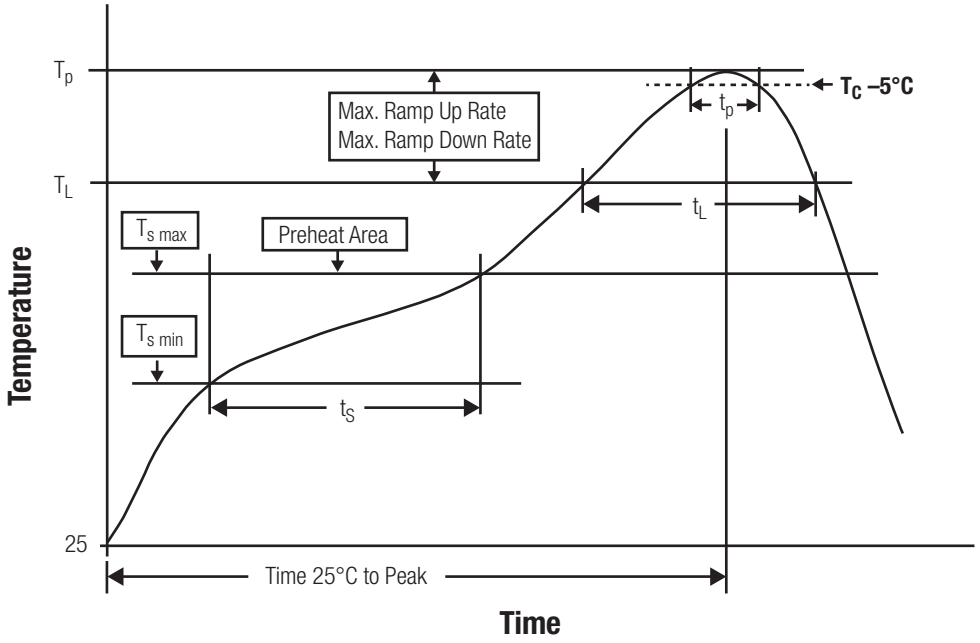

Classification Reflow Soldering Profile:

Profile Feature		Value
Preheat Temperature Min	$T_{s\ min}$	150 °C
Preheat Temperature Max	$T_{s\ max}$	200 °C
Preheat Time t_s from $T_{s\ min}$ to $T_{s\ max}$	t_s	60 - 120 seconds
Ramp-up Rate (T_L to T_P)		3 °C/ second max.
Liquidous Temperature	T_L	217 °C
Time t_L maintained above T_L	t_L	60 - 150 seconds
Peak package body temperature	T_p	$T_p \leq T_c$, see Table below
Time within 5°C of actual peak temperature	t_p	20 - 30 seconds
Ramp-down Rate (T_P to T_L)		6 °C/ second max.
Time 25°C to peak temperature		8 minutes max.

refer to IPC/ JEDEC J-STD-020E

Package Classification Reflow Temperature (T_C):

Properties	Volume mm³ <350	Volume mm³ 350-2000	Volume mm³ >2000
PB-Free Assembly I Package Thickness < 1.6 mm	260 °C	260 °C	260 °C
PB-Free Assembly I Package Thickness 1.6 mm - 2.5 mm	260 °C	250 °C	245 °C
PB-Free Assembly I Package Thickness > 2.5 mm	250 °C	245 °C	245 °C

refer to IPC/ JEDEC J-STD-020E

RoHS COMPLIANT | REACh COMPLIANT | HALOGEN FREE

WÜRTH ELEKTRONIK MORE THAN YOU EXPECT

Würth Elektronik eiSos GmbH & Co. KG
EMC & Inductive Solutions
Max-Eyth-Str. 1
74638 Waldenburg
Germany
Tel. +49 (0) 79 42 945 - 0
www.we-online.com
eiSos@we-online.com

CHECKED	REVISION	DATE (YYYY-MM-DD)	GENERAL TOLERANCE	PROJECTION METHOD
KGa	001.002	2025-12-31	DIN ISO 2768-1m	

DESCRIPTION
WA-SMST SMT Steel Spacer with through hole

ORDER CODE
9774060960RX

SIZE/TYPE	BUSINESS UNIT	STATUS	PAGE
Ø3.3	eiCan	Valid	3/5

This electronic component has been designed and developed for usage in general electronic equipment only. This product is not authorized for use in equipment where a higher safety standard and reliability standard is especially required or where a failure of the product is reasonably expected to cause severe personal injury or death, unless the parties have executed an agreement specifically governing such use. Moreover Würth Elektronik eiSos GmbH & Co KG products are neither designed nor intended for use in areas such as military, aerospace, aviation, nuclear control, submarine, transportation, transportation signal, disaster prevention, medical, public information network etc.. Würth Elektronik eiSos GmbH & Co KG must be informed about the intent of such usage before the design-in stage. In addition, sufficient reliability evaluation checks for safety must be performed on every electronic component which is used in electrical circuits that require high safety and reliability functions or performance.

Cautions and Warnings:

The following conditions apply to all goods within the product series of WA-SMST of Würth Elektronik eiSos GmbH & Co. KG:

General:

- This mechanical component was designed and manufactured for use in general electronic equipment.
- Würth Elektronik must be asked for written approval (following the PPAP procedure) before incorporating the components into any equipment in fields such as military, aerospace, aviation, nuclear control, submarine, transportation (automotive control, train control, ship control), transportation signal, disaster prevention, medical, public information network, etc. where higher safety and reliability are especially required and/or if there is the possibility of direct damage or human injury.
- Mechanical components that will be used in safety-critical or high-reliability applications, should be pre-evaluated by the customer.
- The component is designed and manufactured to be used within the datasheet specified values. If the usage and operation conditions specified in the datasheet are not met, the component surface may be damaged or dissolved.
- Do not drop or impact the components, the component may be damaged.
- Würth Elektronik products are qualified according to international standards. Würth Elektronik does not warrant any customer qualified product characteristics beyond Würth Elektronik's specifications, for its validity and sustainability over time.
- The responsibility for the applicability of the customer specific products and use in a particular customer design is always within the authority of the customer. All technical specifications for standard products do also apply to customer specific products.

Product Specific:

Soldering:

- The solder profile must comply with the Würth Elektronik technical soldering specification. All other profiles will void the warranty.
- All other soldering methods are at the customers' own risk.

Cleaning and Washing:

- Washing agents used during the production to clean the customer application might damage or change the characteristics of the component. Washing agents may have a negative effect on the long-term functionality of the product.
- Using a brush during the cleaning process may damage the component. Therefore, we do not recommend using a brush during the PCB cleaning process.

Potting:

- If the product is potted in the customer application, the potting material might shrink or expand during and after hardening. Shrinking could lead to an incomplete seal, allowing contaminants into the components. Expansion could damage the components. We recommend a manual inspection after potting or coating to avoid these effects.

Storage Conditions:

- A storage of Würth Elektronik products for longer than 12 months is not recommended. Therefore, all products shall be used within the period of 12 months based on the day of shipment.
- Do not expose the components to direct sunlight.
- The storage conditions in the original packaging are defined according to DIN EN 61760-2.
- The storage conditions stated in the original packaging apply to the storage time and not to the transportation time of the components.

Packaging:

- The packaging specifications apply only to purchase orders comprising whole packaging units. If the ordered quantity exceeds or is lower than the specified packaging unit, packaging in accordance with the packaging specifications cannot be ensured.

Handling:

- The maximum permissible torques must be observed to prevent mechanical destruction of the component and PCB.
- It may occur that the hole and/or the thread is not completely coated. Stains and/or deposits may arise during rinsing and drying the component. The soldering, storage and holding forces are not affected thereby.
- Violation of the technical product specifications will void the warranty.
- The temperature rise of the component must be taken into consideration. The operating temperature is comprised of ambient temperature and temperature rise of the component.The operating temperature of the component shall not exceed the maximum temperature specified.

These cautions and warnings comply with the state of the scientific and technical knowledge and are believed to be accurate and reliable. However, no responsibility is assumed for inaccuracies or incompleteness.

RoHS COMPLIANT | REACh COMPLIANT | HALOGEN FREE

WÜRTH ELEKTRONIK MORE THAN YOU EXPECT

Würth Elektronik eiSos GmbH & Co. KG
EMC & Inductive Solutions
Max-Eyth-Str. 1
74638 Waldenburg
Germany
Tel. +49 (0) 79 42 945 - 0
www.we-online.com
eiSos@we-online.com

CHECKED	REVISION	DATE (YYYY-MM-DD)	GENERAL TOLERANCE	PROJECTION METHOD
KGa	001.002	2025-12-31	DIN ISO 2768-1m	

DESCRIPTION: **WA-SMST SMT Steel Spacer with through hole**

ORDER CODE: **9774060960RX**

SIZE/TYPE	BUSINESS UNIT	STATUS	PAGE
Ø3.3	eiCan	Valid	4/5

This electronic component has been designed and developed for usage in general electronic equipment only. This product is not authorized for use in equipment where a higher safety standard and reliability standard is especially required or where a failure of the product is reasonably expected to cause severe personal injury or death, unless the parties have executed an agreement specifically governing such use. Moreover Würth Elektronik eiSos GmbH & Co KG products are neither designed nor intended for use in areas such as military, aerospace, aviation, nuclear control, submarine, transportation, transportation signal, disaster prevention, medical, public information network etc.. Würth Elektronik eiSos GmbH & Co KG must be informed about the intent of such usage before the design-in stage. In addition, sufficient reliability evaluation checks for safety must be performed on every electronic component which is used in electrical circuits that require high safety and reliability functions or performance.

Important Notes

The following conditions apply to all goods within the product range of Würth Elektronik eiSos GmbH & Co. KG:

1. General Customer Responsibility

Some goods within the product range of Würth Elektronik eiSos GmbH & Co. KG contain statements regarding general suitability for certain application areas. These statements about suitability are based on our knowledge and experience of typical requirements concerning the areas, serve as general guidance and cannot be estimated as binding statements about the suitability for a customer application. The responsibility for the applicability and use in a particular customer design is always solely within the authority of the customer. Due to this fact it is up to the customer to evaluate, where appropriate to investigate and decide whether the device with the specific product characteristics described in the product specification is valid and suitable for the respective customer application or not.

2. Customer Responsibility related to Specific, in particular Safety-Relevant Applications

It has to be clearly pointed out that the possibility of a malfunction of electronic components or failure before the end of the usual lifetime cannot be completely eliminated in the current state of the art, even if the products are operated within the range of the specifications.
In certain customer applications requiring a very high level of safety and especially in customer applications in which the malfunction or failure of an electronic component could endanger human life or health it must be ensured by most advanced technological aid of suitable design of the customer application that no injury or damage is caused to third parties in the event of malfunction or failure of an electronic component. Therefore, customer is cautioned to verify that data sheets are current before placing orders. The current data sheets can be downloaded at www.we-online.com.

3. Best Care and Attention

Any product-specific notes, cautions and warnings must be strictly observed. Any disregard will result in the loss of warranty.

4. Customer Support for Product Specifications

Some products within the product range may contain substances which are subject to restrictions in certain jurisdictions in order to serve specific technical requirements. Necessary information is available on request. In this case the field sales engineer or the internal sales person in charge should be contacted who will be happy to support in this matter.

5. Product R&D

Due to constant product improvement product specifications may change from time to time. As a standard reporting procedure of the Product Change Notification (PCN) according to the JEDEC-Standard inform about minor and major changes. In case of further queries regarding the PCN, the field sales engineer or the internal sales person in charge should be contacted. The basic responsibility of the customer as per Section 1 and 2 remains unaffected.

6. Product Life Cycle

Due to technical progress and economical evaluation we also reserve the right to discontinue production and delivery of products. As a standard reporting procedure of the Product Termination Notification (PTN) according to the JEDEC-Standard we will inform at an early stage about inevitable product discontinuance. According to this we cannot guarantee that all products within our product range will always be available. Therefore it needs to be verified with the field sales engineer or the internal sales person in charge about the current product availability expectancy before or when the product for application design-in disposal is considered. The approach named above does not apply in the case of individual agreements deviating from the foregoing for customer-specific products.

7. Property Rights

All the rights for contractual products produced by Würth Elektronik eiSos GmbH & Co. KG on the basis of ideas, development contracts as well as models or templates that are subject to copyright, patent or commercial protection supplied to the customer will remain with Würth Elektronik eiSos GmbH & Co. KG. Würth Elektronik eiSos GmbH & Co. KG does not warrant or represent that any license, either expressed or implied, is granted under any patent right, copyright, mask work right, or other intellectual property right relating to any combination, application, or process in which Würth Elektronik eiSos GmbH & Co. KG components or services are used.

8. General Terms and Conditions

Unless otherwise agreed in individual contracts, all orders are subject to the current version of the “General Terms and Conditions of Würth Elektronik eiSos Group”, last version available at www.we-online.com.

RoHS COMPLIANT | REACh COMPLIANT | HALOGEN FREE

WÜRTH ELEKTRONIK MORE THAN YOU EXPECT

Würth Elektronik eiSos GmbH & Co. KG
EMC & Inductive Solutions
Max-Eyth-Str. 1
74638 Waldenburg
Germany
Tel. +49 (0) 79 42 945 - 0
www.we-online.com
eiSos@we-online.com

CHECKED	REVISION	DATE (YYYY-MM-DD)	GENERAL TOLERANCE	PROJECTION METHOD
KGa	001.002	2025-12-31	DIN ISO 2768-1m	

DESCRIPTION: **WA-SMST SMT Steel Spacer with through hole**

ORDER CODE: **9774060960RX**

SIZE/TYPE	BUSINESS UNIT	STATUS	PAGE
Ø3.3	eiCan	Valid	5/5

This electronic component has been designed and developed for usage in general electronic equipment only. This product is not authorized for use in equipment where a higher safety standard and reliability standard is especially required or where a failure of the product is reasonably expected to cause severe personal injury or death, unless the parties have executed an agreement specifically governing such use. Moreover Würth Elektronik eiSos GmbH & Co KG products are neither designed nor intended for use in areas such as military, aerospace, aviation, nuclear control, submarine, transportation, transportation signal, disaster prevention, medical, public information network etc.. Würth Elektronik eiSos GmbH & Co KG must be informed about the intent of such usage before the design-in stage. In addition, sufficient reliability evaluation checks for safety must be performed on every electronic component which is used in electrical circuits that require high safety and reliability functions or performance.