CUSTOMER TERMINAL	RoHS	LEAD(Pb)−FREE
Sn96%, Ag4%	Yes	Yes

more than you expect

WÜRTH ELEKTRONIK

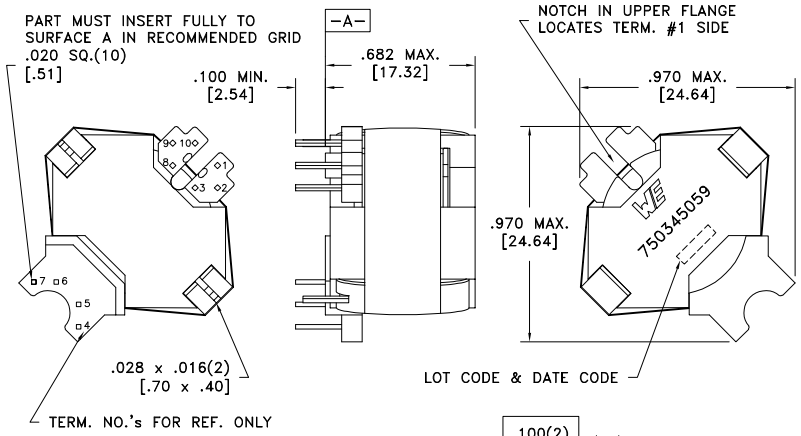

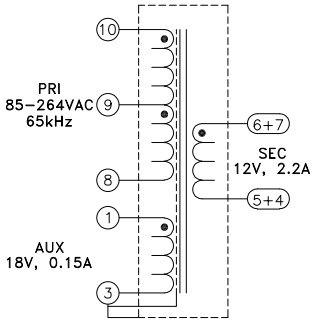

Customer to tie terminals 4+5 and 6+7 on PC board.

Application of the transformer allows for the leadwires between terminals 4&5 and 6&7 to solder bridge.

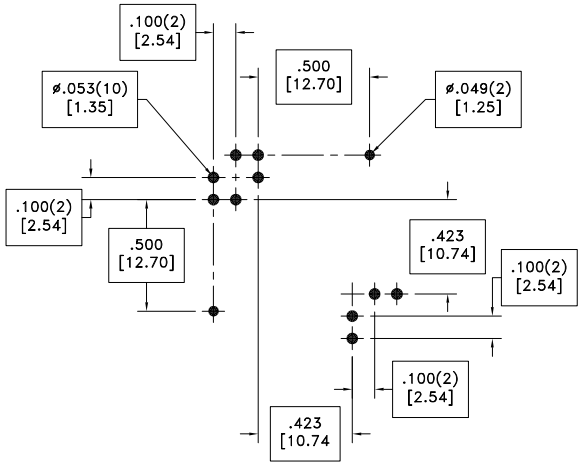

RECOMMENDED
P.C. PATTERN, COMPONENT SIDE

ELECTRICAL SPECIFICATIONS @ 25°C unless otherwise noted:

PARAMETER		TEST CONDITIONS	VALUE
D.C. RESISTANCE	1−3	@20°C	0.12 ohms max.
D.C. RESISTANCE	8−10	@20°C	0.50 ohms max.
D.C. RESISTANCE	4−7	tie(4+5, 6+7), @20°C	0.02 ohms max.
INDUCTANCE	8−10	10kHz, 100mVAC, Ls	450.00uH ±10%
SATURATION CURRENT	8−10	20% rolloff from initial	2A
LEAKAGE INDUCTANCE	8−10	tie(4+5+6+7), 100kHz, 100mVAC, Ls	12uH max.
DIELECTRIC	10−7	tie(1+10, 4+5+6+7), 3750VAC, 1 second	3000VAC, 1 minute
TURNS RATIO		(10−8):(1−3)	5.33:1
TURNS RATIO		(10−8):(7−4), tie(4+5, 6+7)	8.00:1

GENERAL SPECIFICATIONS:

OPERATING TEMPERATURE RANGE: −40°C to +125°C including temp rise.

Designed to comply with the following requirements as defined by IEC62368−1, EN62368−1, UL62368−1/CSA62368−1 and AS/NZS62368.1:

- Reinforced insulation for a primary circuit at a working voltage of 265Vrms, 400Vpeak, Overvoltage Category II, Pollution Degree 2.

Wire insulation & RoHS status not affected by wire color.
Wire insulation color may vary depending on availability.

REV.	DATE	Packaging Specifications		Tolerances unless otherwise specified:	DRAWING TITLE	PART NO.
		Method: Tray PKG−0027 www.we−online.com/midcom	CONVENTION PLACEMENT	Angles: ±1° Decimals: ±.005 [.13] Fractions: ±1/64 Footprint: ±.001 [.03]	**TRANSFORMER**	**750345059**
6A	9/23	SEE REVISION SHEET FOR REVISION LEVEL		This drawing is dual dimensioned. Dimensions in brackets are in millimeters.	eiSos p/n: 750345059	SPECIFICATION SHEET 1 OF 1

compliant RoHS