24V Input / 1W / 4kV Functional Isolated / Unregulated ±12V Output

DESCRIPTION

The FISM 17784123412 MagI³C power module is an unregulated, functionally isolated, fully integrated DC/DC converter with dual output.

The module integrates the switching power stage, control circuitry, transformer and input/output capacitors.

The module requires no external components for operation thus reducing design effort and complexity to a minimum.

The FISM module ensures fast time to market and low development costs.

The 17784123412 module achieves an efficiency up to 89%.

The module is available in an SIP-7 package (19.5 x 6 x 10mm).

FEATURES

- 4kV DC functional isolation for 1s
- 3kV DC functional isolation for 60s
- Nominal input voltage rail: 24V
- Dual output voltage: ±12V unregulated
- Low output voltage ripple: Typ. 30mV at full load
- Output voltage accuracy: Typ. 1% at full load
- Output power: 1W (±0.042A)
- Dynamic power boost up to ±0.063A for 0.5s
- Continuous short-circuit protection
- Integrated C_{IN}, C_{OUT} and transformer
- Operating ambient temperature range: -40°C to 105°C
- RoHS & REACH compliant
- Complies with EN55032 (CISPR-32) class B conducted and radiated emissions standard
- UL62368-1 recognized

TYPICAL APPLICATIONS

- Data acquisition
- Test and measurement systems
- Interface and microcontroller supplies
- Industrial control

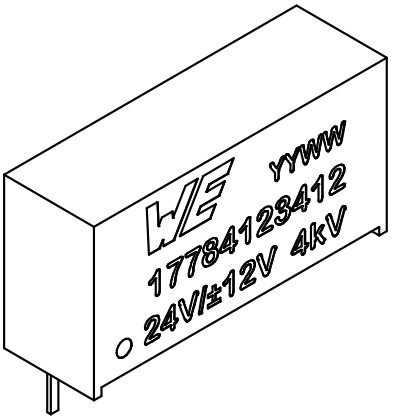

TYPICAL CIRCUIT DIAGRAM

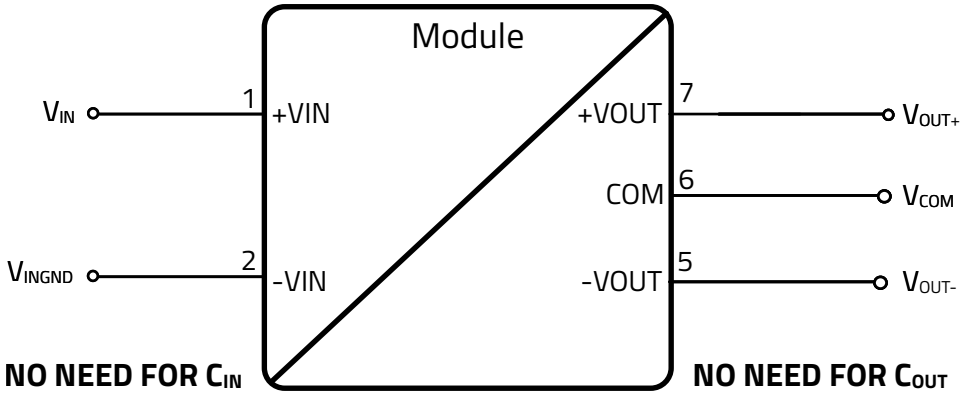

© August 2026

CONTENTS

1 PINOUT **4**

2 ORDERING INFORMATION **5**

3 PINOUT COMPATIBLE FAMILY MEMBERS **5**

4 SALES INFORMATION **5**

5 ABSOLUTE MAXIMUM RATINGS **6**

6 OPERATING CONDITIONS **6**

7 THERMAL SPECIFICATIONS **6**

8 ELECTRICAL SPECIFICATIONS **7**

9 APPROVALS **8**

10 RoHS, REACH **8**

11 PACKAGE SPECIFICATIONS **8**

12 RELIABILITY **8**

13 NOTES **9**

14 ISOLATION VOLTAGE **10**
14.1 Dielectric Test Setup (High Pot Test) 10
14.2 Repeated High-Voltage Isolation Testing 10

15 TYPICAL PERFORMANCE CURVES **11**
15.1 Radiated and Conducted Emissions EN55032 (CISPR-32) Class B Compliance 11
15.1.1 Radiated Emissions EN55032 (CISPR-32) Class B Compliant Test Setup 11
15.1.2 Conducted Emissions EN55032 (CISPR-32) Class B Compliant Test Setup 11
15.1.3 Radiated And Conducted Emissions 12
15.2 DC Performance Curves 13
15.2.1 Efficiency 13
15.2.2 Dynamic Power Boost I_{MOC} 13
15.2.3 Temperature Derating 14
15.2.4 Output Voltage Tolerance Envelope - Both Outputs 14

16 BLOCK DIAGRAM **15**

17 CIRCUIT DESCRIPTION **15**

18 PROTECTION FEATURES **16**
18.1 Short Circuit Protection (SCP) 16

19 DESIGN EXAMPLE **17**
19.1 Layout 17
19.2 Schematic 18
19.3 Bill of Materials 18

20 APPLICATION CONSIDERATIONS **19**
20.1 Primary Side Parallel Connection 19
20.2 Secondary Side Serial Connection 20
20.3 Reverse Polarity Protection 21

© August 2026

21 HANDLING RECOMMENDATIONS **22**
21.1 Solder Profile 22

22 PHYSICAL DIMENSIONS **23**
22.1 Component 23
22.2 Recommended Drill Holes 24
22.3 Packaging 25
22.3.1 Tube 25
22.3.2 Carton 25

23 DOCUMENT HISTORY **26**

24 LIST OF FIGURES **27**

25 LIST OF TABLES **28**

26 CAUTIONS AND WARNINGS **29**

27 IMPORTANT NOTES **30**

© August 2026

1 PINOUT

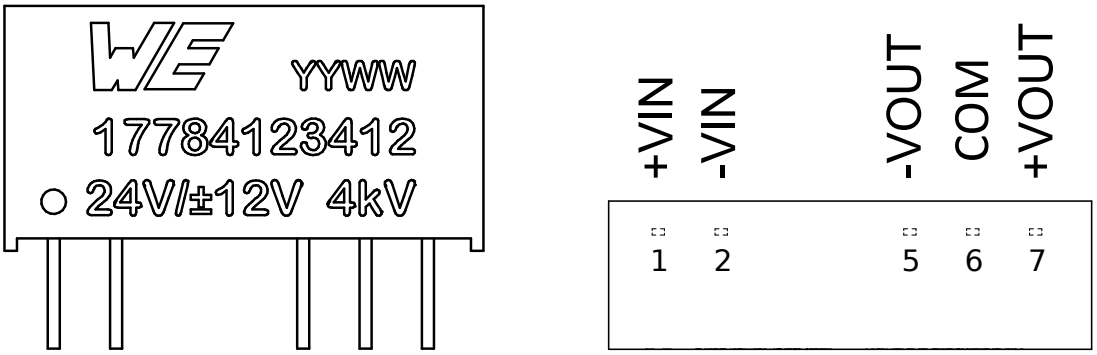

Figure 1: Pinout.

Table 1: Marking description.

MARKING	DESCRIPTION
WE	Würth Elektronik eiSos GmbH & Co. KG
YY	Year
WW	Calendar week
17784123412	Order code
24V /±12V	Input voltage / output voltage
4kV	Isolation voltage

Table 2: Pin description.

SYMBOL	NUMBER	TYPE	DESCRIPTION
+VIN	1	Power	Input voltage pin
-VIN	2	Power	Input ground pin
-VOUT	5	Power	Negative output voltage pin
COM	6	Power	Output common pin
+VOUT	7	Power	Positive output voltage pin

© August 2026

2 ORDERING INFORMATION

Table 3: Ordering information.

ORDER CODE	SPECIFICATIONS	PACKAGE	PACKAGING UNIT
17784123412	24V Vin / ±12V Vout / 1W	SIP-7	Tube (25 pieces)

3 PINOUT COMPATIBLE FAMILY MEMBERS

Table 4: Pinout compatible family members.

ORDER CODE	SPECIFICATIONS	PACKAGE	PACKAGING UNIT
17791051412	5V Vin / ±5V Vout / 1W	SIP-7	Tube (25 pieces)
17791052412	12V Vin / ±5V Vout / 1W		
17791053412	24V Vin / ±5V Vout / 1W		
17784121412	5V Vin / ±12V Vout / 1W		
17784122412	12V Vin / ±12V Vout / 1W		

4 SALES INFORMATION

Table 5: Sales information.

SALES CONTACT
Würth Elektronik eiSos GmbH & Co. KG EMC and Inductive Solutions Max-Eyth-Str. 1 74638 Waldenburg Germany Tel. +49 (0) 7942 945 0 www.we-online.com/powermodules Technical support: wpme-support@we-online.com

© August 2026

5 ABSOLUTE MAXIMUM RATINGS

Caution:
Exceeding the listed absolute maximum ratings may affect the device negatively and may cause permanent damage.

Table 6: Absolute maximum ratings.

SYMBOL	PARAMETER	LIMIT		UNIT
		MIN[1]	MAX[1]	
VIN	Input pin voltage	-0.3	38	V
-VOUT/+VOUT	Output pin voltage	-0.3	25	V
V_{ISO}	Isolation voltage input to output for 60s[6]	—	3	kV
	Isolation voltage input to output, 100% tested for 1s[7]	—	4	kV
$T_{storage}$	Assembled, non-operating storage temperature	-40	125	°C
V_{ESD}	ESD Voltage (HBM), according to JESD-22-114[4]	-4	4	kV

6 OPERATING CONDITIONS

Operating conditions are conditions under which the device is intended to be functional. All input values are referenced to ground while output values are referenced to the common pin.

MIN and MAX limits are valid for the recommended ambient temperature range of -40°C to 105°C.

Table 7: Operating conditions.

SYMBOL	PARAMETER	MIN[1]	TYP[3]	MAX[1]	UNIT
V_{IN}	Input voltage	21.6	24	26.4	V
V_{OUT}	Output voltage	—	±12	—	V
I_{OUT}	Nominal output current[5]	—	—	±0.042	A
P_{OUT}	Nominal output power (without derating)	—	—	1	W
C_{OUT_MAX}	Maximal output capacitance (for both outputs)	—	—	330	µF
T_a	Ambient temperature range[2]	-40	—	105	°C
T_{JOP}	Junction temperature range	-40	—	125	°C

7 THERMAL SPECIFICATIONS

Caution:
Exceeding the listed absolute maximum ratings may affect the device negatively and may cause permanent damage.

Table 8: Thermal specifications.

SYMBOL	PARAMETER	TYP[3]	UNIT
T_{Case_Max}	Maximum case temperature (top side)	105	°C

© August 2026

8 ELECTRICAL SPECIFICATIONS

Caution:
MIN and MAX limits are valid for the recommended ambient temperature range of -40°C to 105°C. Typical values represent statistically the utmost probable values at the following conditions: T_A = 25°C, unless otherwise noted.

Table 9: Electrical specifications.

SYMBOL	PARAMETER	TEST CONDITIONS	MIN[1]	TYP[3]	MAX[1]	UNIT
Output Current						
I_{MOC}	Maximum overload current		—	—	±0.063[8]	A
Accuracy						
V_{OUT}	Line regulation	per 1.0% change in input voltage[9]	—	1.2	—	%
	Load Regulation	V_{IN} nominal, V_{OUT} = ±12V I_{OUT} = ±0.0084A to ±0.042A	—	7	10	%
	Output voltage accuracy	V_{IN} nominal, I_{OUT} = ±0.042A	-11	1	12	%
	Positive output voltage at no load	V_{IN} nominal	—	12.67	—	V
	Negative output voltage at no load	V_{IN} nominal	—	-12.69	—	V
	Output voltage ripple & noise	V_{IN} nominal, V_{OUT} = 12V 20MHz BWL	—	30	—	mV_{PP}
Switching Frequency						
f_{SW}	Switching frequency, internal clock	V_{IN} nominal, I_{OUT} = ±0.042A	—	250	—	kHz
	Switching frequency, input current	V_{IN} nominal, I_{OUT} = ±0.042A	—	500[10]	—	kHz
Input Current						
I_{IN}	No load input current	V_{IN}= 24V, I_{OUT} = 0A	—	3	—	mA
Efficiency						
η	Efficiency	V_{IN}= 24V, I_{OUT} = ±0.042A	—	85	—	%
		V_{IN}= 24V, I_{OUT} = 0.030A	—	89	—	%
Isolation Characteristics						
C_{ISO}	Isolation capacitance	100kHz/0.1V	—	20	—	pF
R_{ISO}	Isolation resistance	500VDC	1	—	—	GΩ

© August 2026

9 APPROVALS

Table 10: Approvals.

SYMBOL	STANDARD	DESCRIPTION
c RU® US	62368-1, 2nd Edition	Recognized for use as Audio/Video, Information and Communication Technology Equipment, U.S.A. (UL62368-1) and Canada (C22.2 No. 62368-1) E-File: E497615 Applicable for altitudes up to 2000m

10 RoHS, REACH

Table 11: RoHS, REACH.

RoHS directive	COMPLIANT RoHS&REACH WÜRTH ELEKTRONIK	Directive 2011/65/EU of the European Parliament and the Council of June 8th, 2011 on the restriction of the use of certain hazardous substances in electrical and electronic equipment.
REACH directive		Directive 1907/2006/EU of the European Parliament and the Council of June 1st, 2007 regarding the Registration, Evaluation, Authorization and Restriction of Chemicals (REACH).

11 PACKAGE SPECIFICATIONS

Table 12: Package specifications.

ITEM	PARAMETER	TYP(3)	UNIT
Case	UL94V-0 (Refer to UL approval E150608)	—	—
φ (RH)	Maximum storage humidity (see HANDLING RECOMMENDATIONS for soldering requirements)	95	%
Weight		2.1	g
Vibration	MIL-STD-202G: 5g for 1 minute, 120 cycles each of 3 orientation, test from 10Hz-55Hz		
IP	Degree of protection according to IEC/EC 60529	X0	
Washing	Washing compatible with standard industrial water based washers.		

12 RELIABILITY

Table 13: Reliability.

SYMBOL	PARAMETER	TEST CONDITIONS	TYP(3)	UNIT
MTBF(11)	Mean Time Between Failures	+25 °C: Ground Benign	$5665 \cdot 10^3$	h
		+85 °C: Ground Benign	$1408 \cdot 10^3$	h

© August 2026

13 NOTES

(1) Min and Max limits are 100% production tested at 25°C. Limits over the operating temperature range are guaranteed through correlation using Statistical Quality Control (SQC) methods.

(2) Measured without heatsink. Natural convection (0 - 20LFM / 0 - 0.1m/s) Test PCB 80mm x 80mm horizontal orientation 35µm copper on top and bottom.

(3) Typical numbers are valid at 25°C ambient temperature and represent statistically the utmost probability assuming the Gaussian distribution.

(4) The human body model is a 100pF capacitor discharged through a 1.5kΩ resistor into each pin. Test method is per JESD-22-114.

(5) Depending on ambient temperature, see thermal derating diagram (Output Power).

(6) Not production tested. It is a design parameter.

(7) Test voltage as defined by end of line test.

(8) Overload current, see Dynamic Power Boost I_{MOC} & Temperature Derating.

(9) Within the complete V_{IN} operating range.

(10) Due to the converter topology, the external output voltage ripple frequency is twice the internal clock frequency.

(11) MIL-HDBK-217F; GB Ground, Benign: Non mobile, temperature and humidity controlled environments readily accessible to maintenance; includes laboratory instruments and test equipment, medical electronic equipment, business and scientific computer complexes, and missiles and support equipment in ground silos; MTBF value is referring to 17784123412.

© August 2026

14 ISOLATION VOLTAGE

To verify the integrity of the isolation a test voltage is applied for a specified time across a component that is designed to provide electrical isolation. This test is known as 'High Pot Test', 'Flash Tested', 'Withstand Voltage', 'Proof Voltage', 'Dielectric Withstand Voltage' or 'Isolation Test Voltage'.

All isolated Power Modules are 100% production tested at their stated isolation voltage. This is 4 kVDC for 1 second.

The isolation test voltage indicated in this datasheet is for voltage transient immunity only. It does not allow this part to be used within a safety isolation system.

The module will function properly with several hundreds of volts applied continuously across the isolation barrier, however surrounding components must be individually analyzed to ensure proper insulation. Isolation measures must be taken into account to prevent any user-accessible circuitry from causing harm.

14.1 Dielectric Test Setup (High Pot Test)

Connect all input and output terminals together (see figure below) before connecting the supply voltage. When testing, set the cut-off current to 1mA with a test voltage of 4kVDC and test time of 1s.

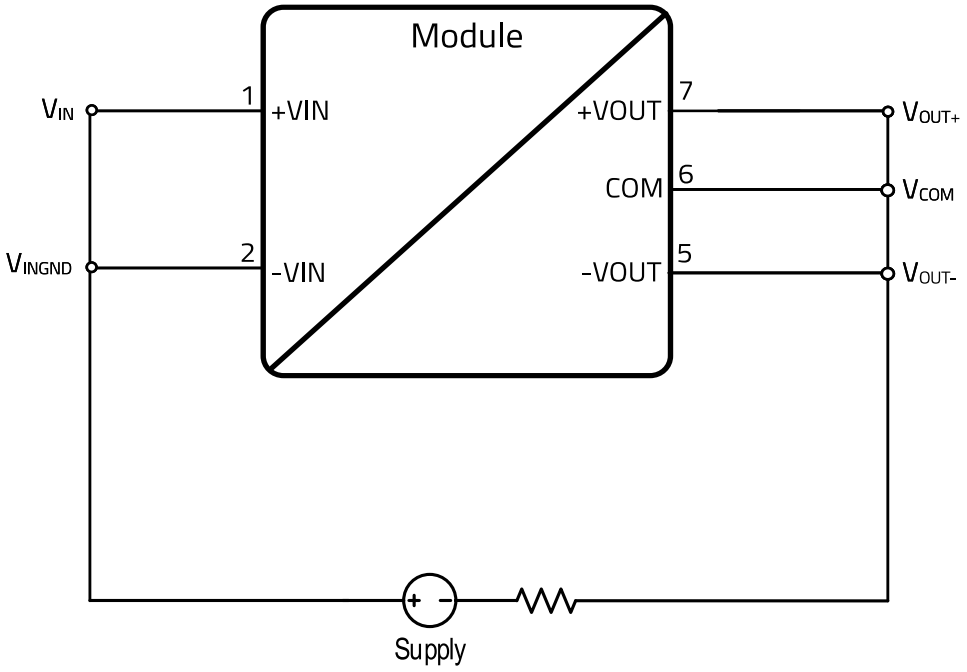

Figure 2: Dielectric test setup.

14.2 Repeated High-Voltage Isolation Testing

A repeated high voltage test of a barrier component degrades its isolation capabilities.
The primary and secondary windings within this transformer are enameled (coated) but do not possess additional isolation. Typically, parts can withstand multiples of their stated test voltage and still perform optimally. The magnet wire coating can degrade over time due to chemical reactions that occur at high voltages. We recommend keeping high voltage isolation testing to a minimum to better protect the isolation between the windings. If repeated high voltage isolation testing is required, consider reducing the voltage by a significant amount e.g. 20% from the test voltage stated within the datasheet.

These safety concerns are equally applicable to components that utilize functional isolation beyond wire coating (i.e. physical barriers or spacing).

© August 2026

15 TYPICAL PERFORMANCE CURVES

If not otherwise specified, the following conditions apply: T_A = 25°C, V_{IN} = 24V, I_{OUT} = ±0.042A.

15.1 Radiated and Conducted Emissions EN55032 (CISPR-32) Class B Compliance

The 17784123412 power module is tested with a standard EMC configuration (1m wire between the module and the load) to give more realistic information about implementation in the applications. The test setup is based on CISPR-16 with the limit values taken from CISPR-32.
Measured with module on the design example shown in chapter DESIGN EXAMPLE in a Fully Anechoic Room (FAR) at 3m antenna distance.

15.1.1 Radiated Emissions EN55032 (CISPR-32) Class B Compliant Test Setup

- Measured in a Fully Anechoic Room (FAR) at 3m antenna distance
- Input wire length: 160cm (80cm horizontal + 80cm vertical)
- Output wire length: 1m

15.1.2 Conducted Emissions EN55032 (CISPR-32) Class B Compliant Test Setup

- Measurement input wire length: 80cm
- Output wire length: 1m

© August 2026

15.1.3 Radiated And Conducted Emissions

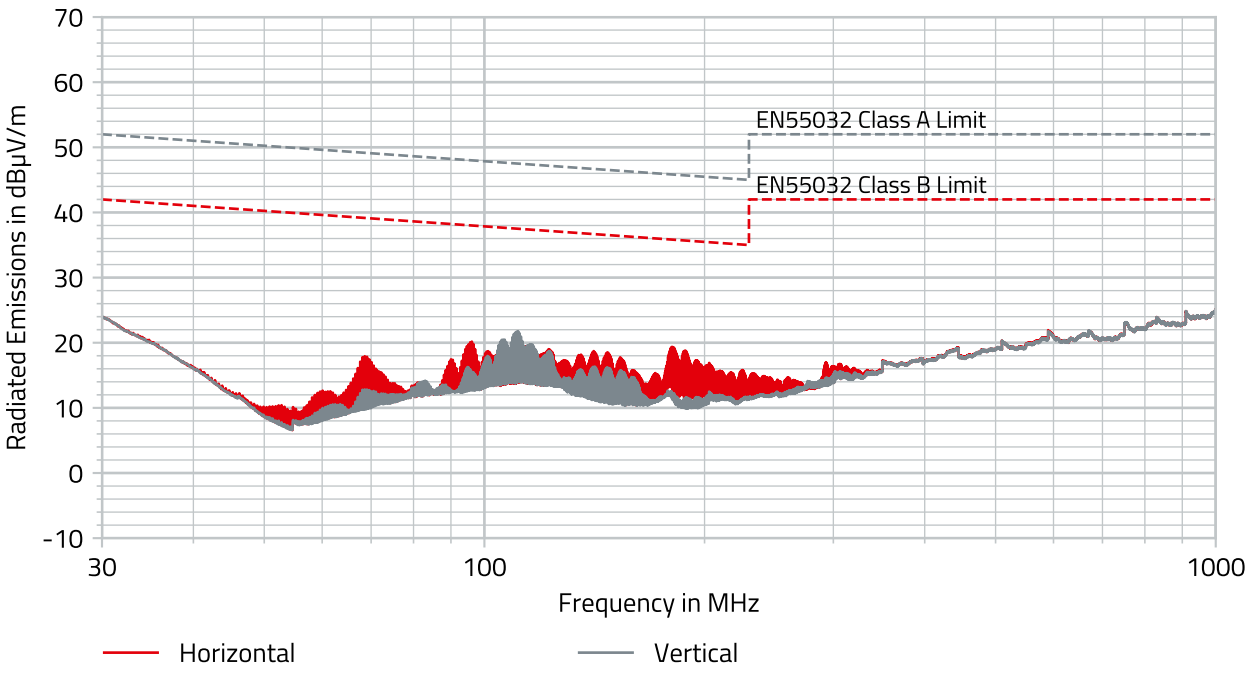

Figure 3: Radiated EMI with input filter.

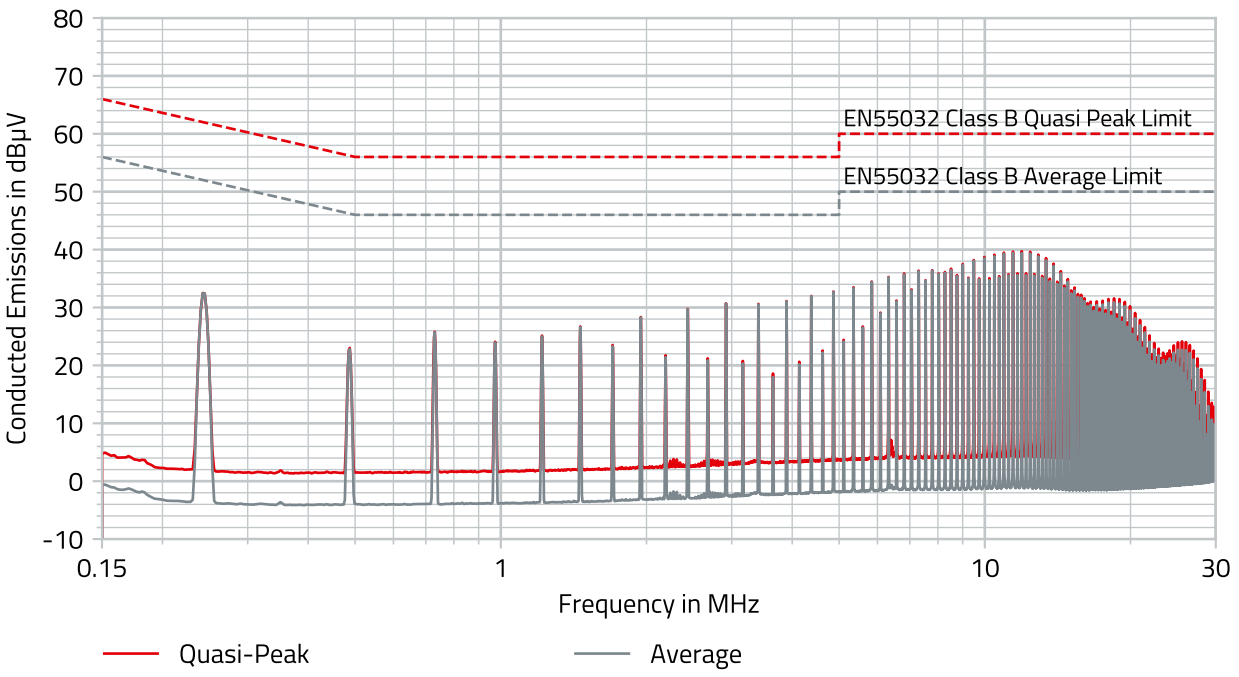

Figure 4: Conducted EMI with input filter.

© August 2026

15.2 DC Performance Curves

15.2.1 Efficiency

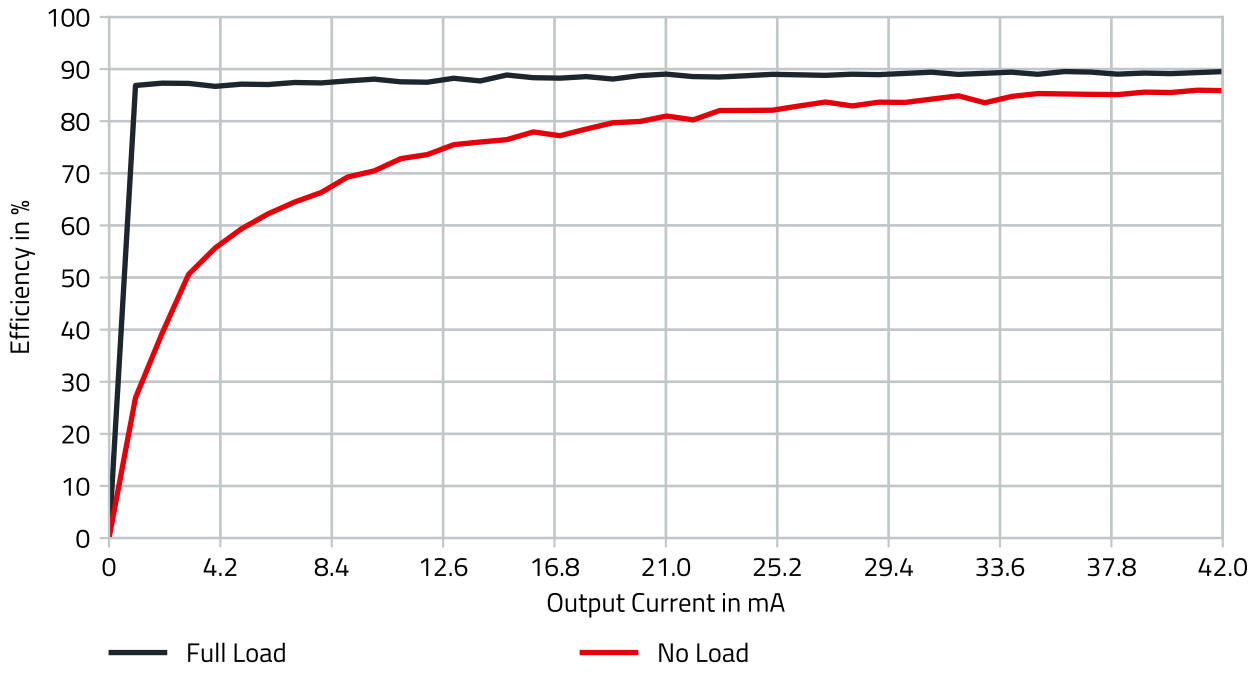

Figure 5: Efficiency.

Note: Under full load condition the second output channel is fully loaded while the load of the tested channel is ramped-up. Under no load condition the second channel is unloaded. The diagram is valid for both outputs.

15.2.2 Dynamic Power Boost I_{MOC}

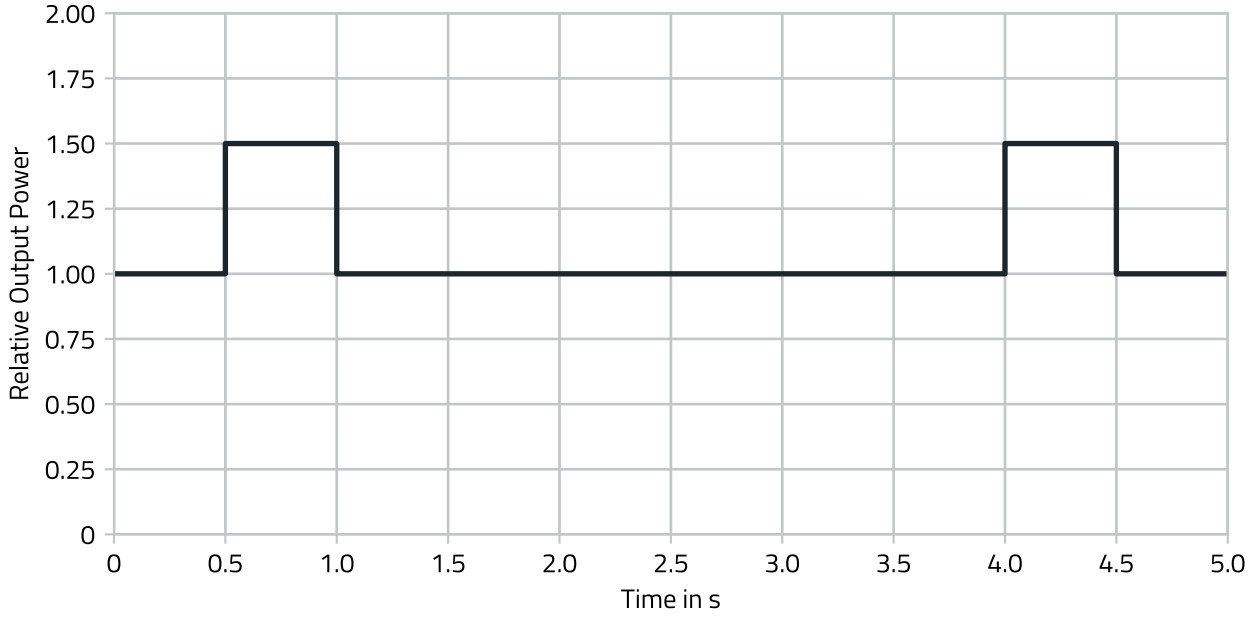

Figure 6: Dynamic power boost.

The overload current of 150% I_{OUT} can be supplied for maximum 0.5s and requires a 3s recovery time until the next overload event. The total power of the module is to be limited to 150% of rated power during an overload event.

© August 2026

15.2.3 Temperature Derating

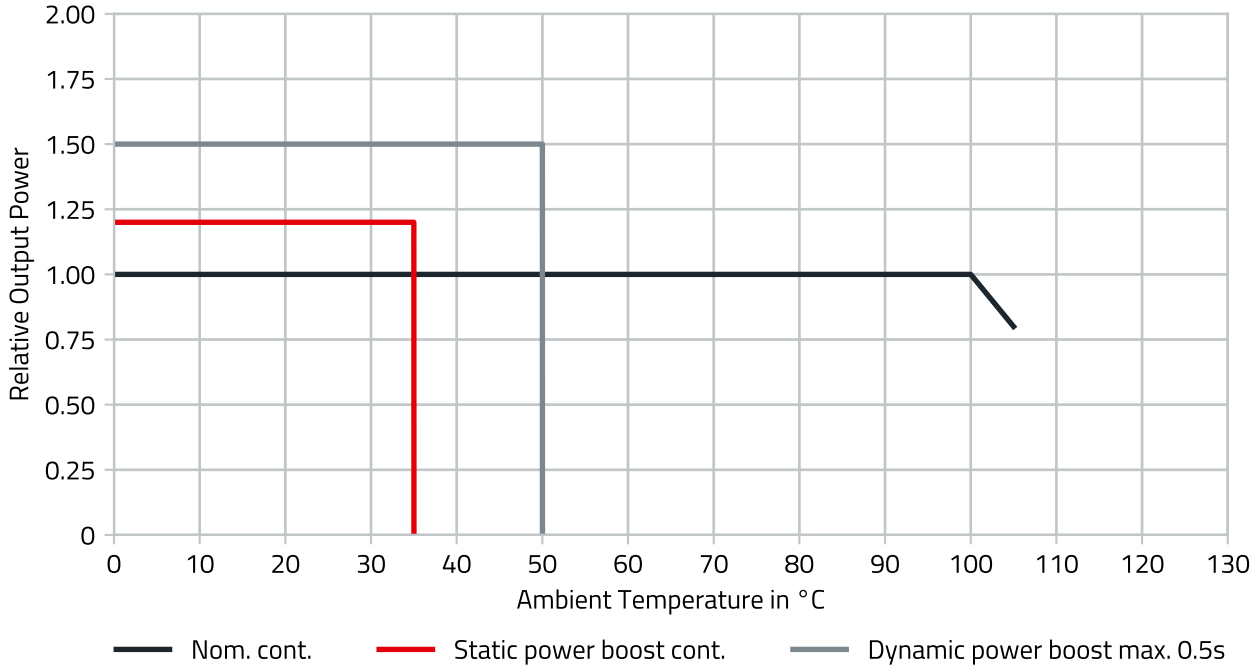

Figure 7: Power boost thermal derating.

15.2.4 Output Voltage Tolerance Envelope - Both Outputs

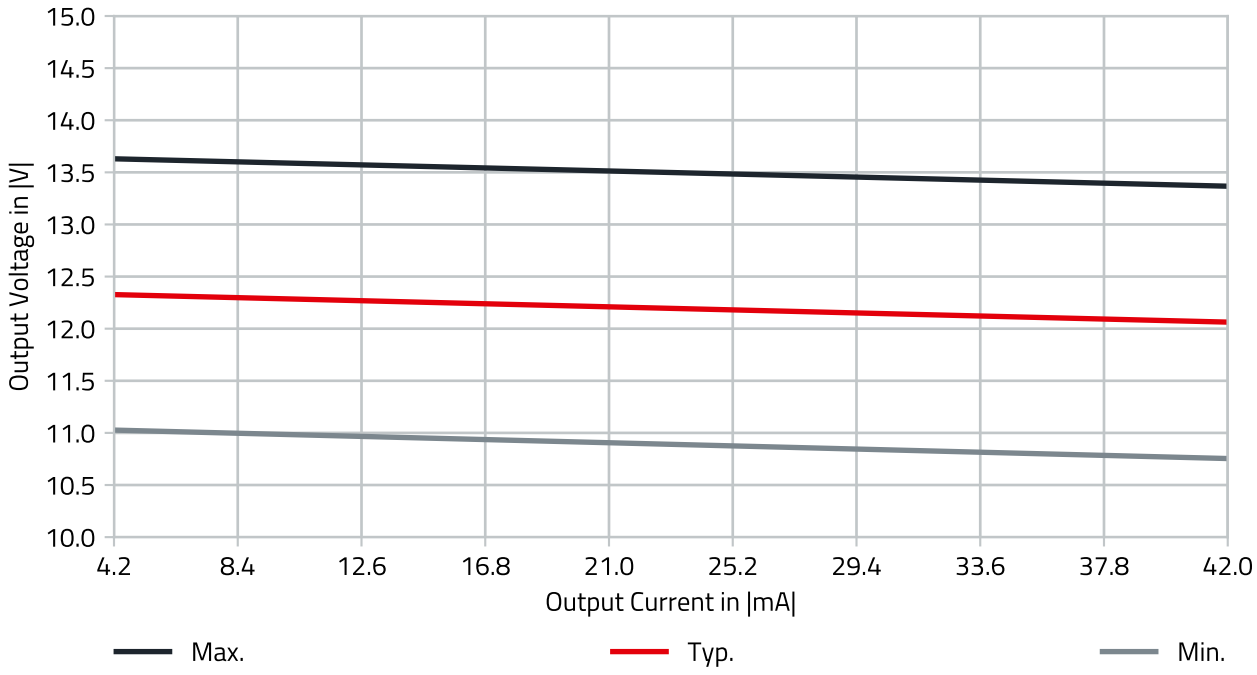

Figure 8: Output voltage tolerance envelope both outputs.

© August 2026

16 BLOCK DIAGRAM

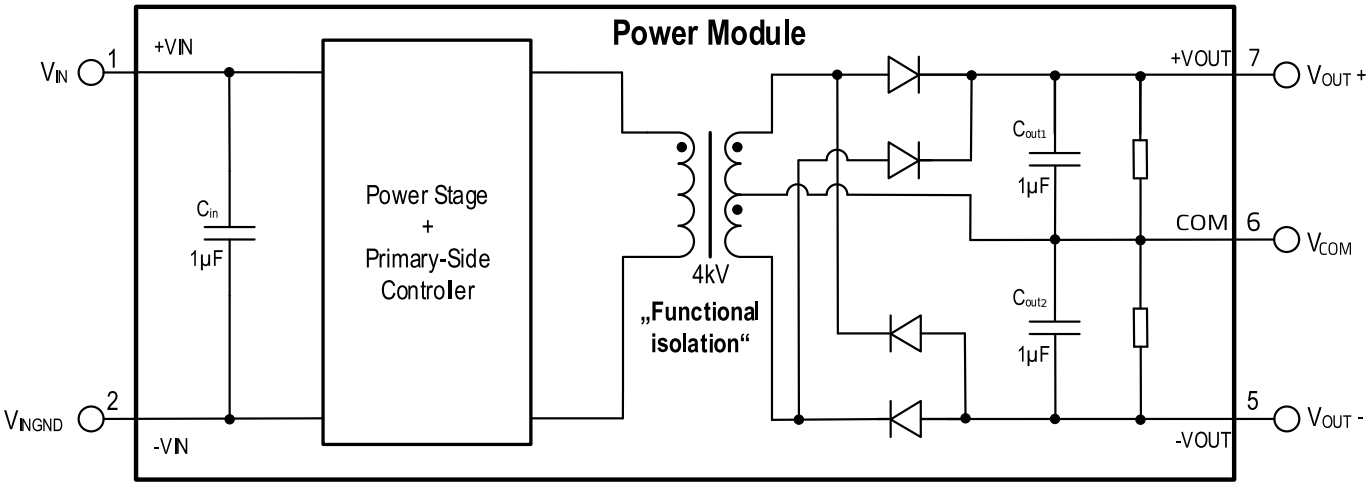

Figure 9: Block diagram.

17 CIRCUIT DESCRIPTION

The MagI³C power module 17784123412 is based on a full bridge topology with dual output. The module has an integrated IC, rectifying diodes, input and output capacitors and a primary and secondary center tapped transformer.

Since there is no feedback path from the output to the input, the duty cycle is fixed at 50% and is independent of the load (zero load to full load). The output voltage is unregulated and defined by the turns ratio of the transformer.

© August 2026

18 PROTECTION FEATURES

18.1 Short Circuit Protection (SCP)

The modules are continously output short circuit protected. The protection is realized via comparing the drain voltages of the MOSFETs to a certain internal reference. During a short circuit situation the output voltage is pulled low. The output voltage recovers to its nominal value after the error is resolved.

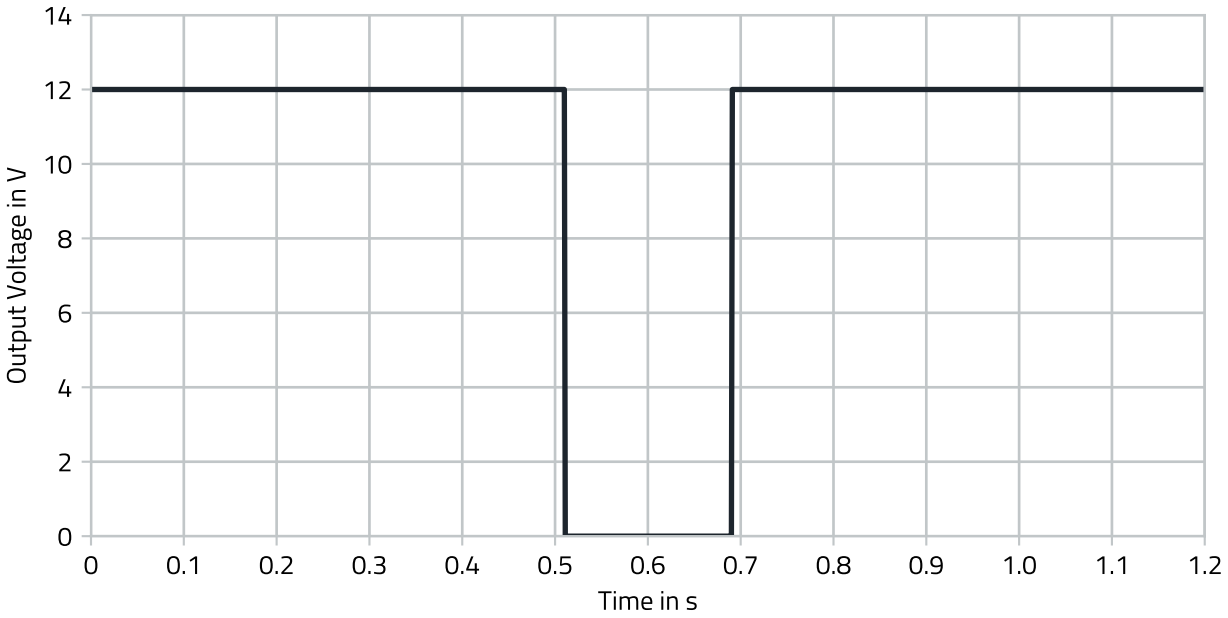

Figure 10: Short circuit protection.

© August 2026

19 DESIGN EXAMPLE

The design example shows a possible solution for 24V to ±12V with a max. Iout of ±0.042A. All of the necessary components to fullfill the requirements of the CISPR-32 EMI conducted and radiated emissions tests are included in the design example. It passes the conducted emissions class B with 0.8m input and 1m output lines and passes the radiated emissions class B in a FAR at 3m measurement distance with 0.8m horizontal, 0.8m vertical input and 1m horizontal output lines. In the final application filter components may be omitted depending on the requirements.

19.1 Layout

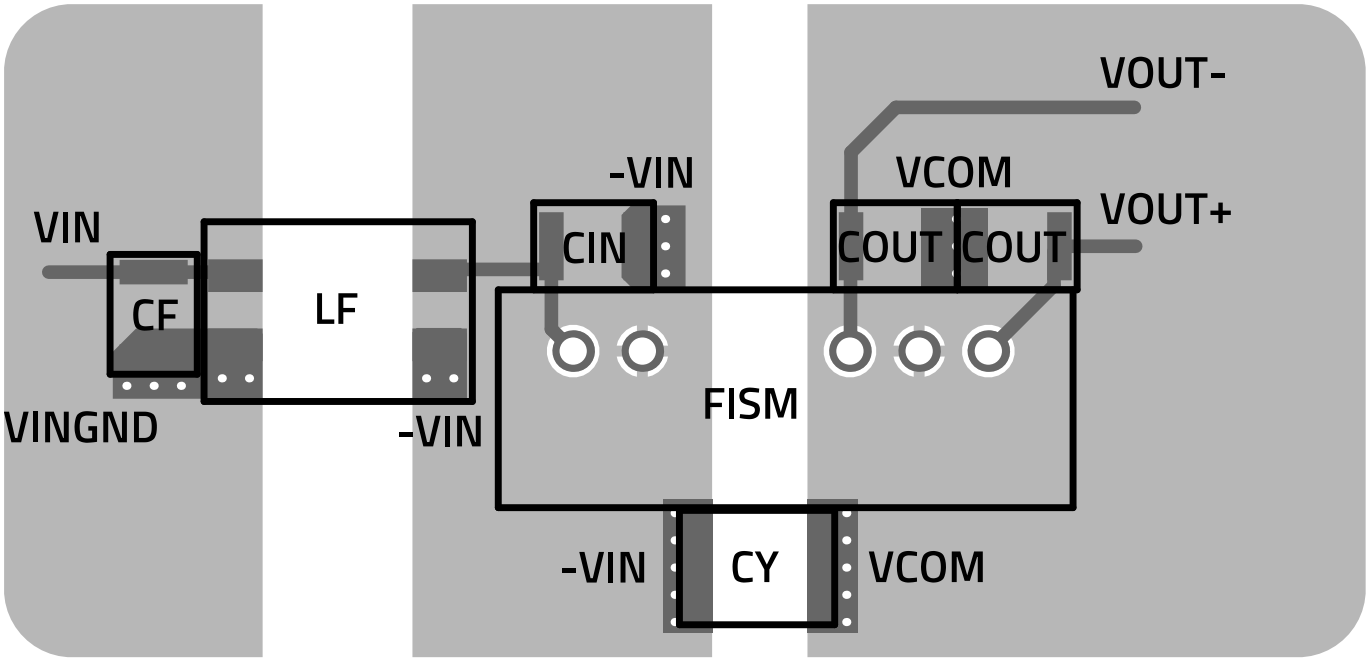

Figure 11: Layout recommendation.

The layout above has been evaluated to provide the optimal performance in terms of transient response, efficiency, ripple and EMI. The design footprint can be reduced at the expense of performance in these parameters. The following recommendation should be followed when designing the layout:

1. The input capacitor should be placed as close as possible to the +VIN and -VIN pins of the device.
2. The output capacitor should be placed as close as possible to the +VOUT, -VOUT and COM pins of the device.
3. The Y-capacitor should be placed as close as possible to the -VIN and COM pins of the device.

© August 2026

19.2 Schematic

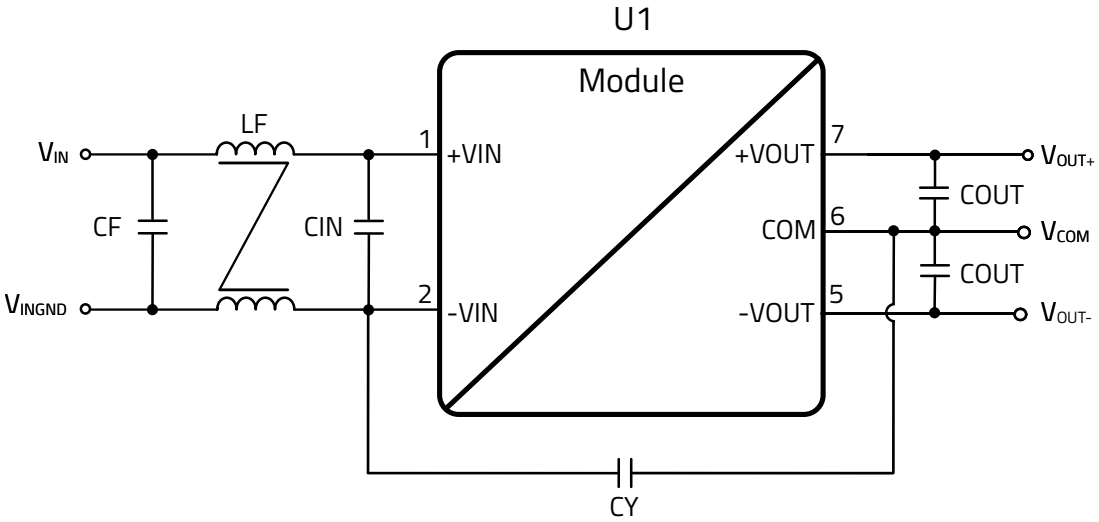

Figure 12: Design example schematic.

19.3 Bill of Materials

Table 14: Design example bill of materials.

DESIGNATOR	DESCRIPTION	FUNCTION	QUANTITY	ORDER CODE	MANUFACTURER
U1	MagI³C Power Module	Power supply	1	17784123412	WE
LF	Filter inductor (CMC), 10uH, SL2 Family, I_R =1.6A	Input Filter	1	744226S	WE
CF	Ceramic chip capacitor 10µF/50V X7R, 1210	Input Filter	1	885012209073	WE
CIN	Ceramic chip capacitor 10µF/50V X7R, 1210	Input Filter / Electrical Performance	1	885012209073	WE
COUT	Ceramic chip capacitor 4.7µF/50V X7R, 1210	Output Filter / Electrical Performance	2	885012209048	WE
CY	Ceramic chip capacitor 2.2nF 3kV 1812 X7R	Y-Cap	1	885342211010	WE

© August 2026

20 APPLICATION CONSIDERATIONS

20.1 Primary Side Parallel Connection

A standard industrial configuration is, that the power modules are supplied by a dc bus voltage. Multiple 17784123412 can be connected to one dc bus as shown in the figure below.
The outputs must not be connected in parallel to each other and could have individual voltages V_{OUT1} and V_{OUT2}. For serial connection of the output see also Secondary Side Serial Connection.
In case of using long supply lines or different wire length for each 17784123412 it is recommended to decouple each power module with an additional LC filter (see schematic below). The decoupling LC filter is also recommended if the supplying dc bus has a high impedance so that high voltage swings at the input of each power module might be present.

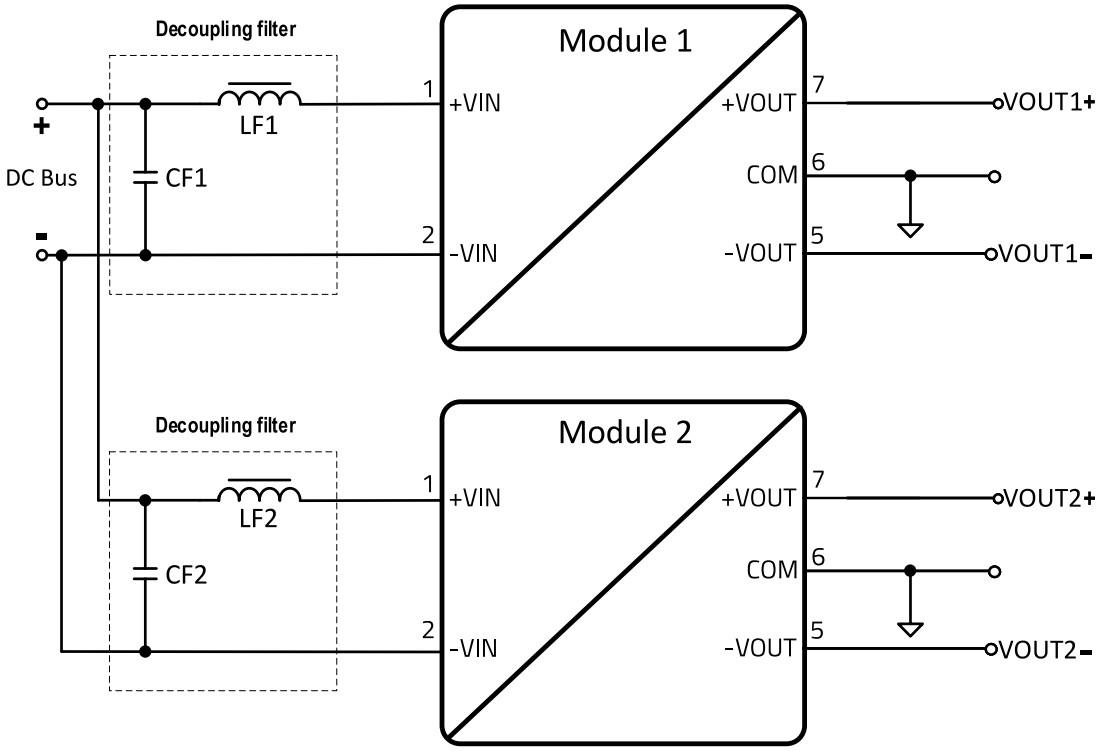

Figure 13: Decoupling for primary side parallel connection.

As a starting point for the decoupling filters, use the values of the reference filters - see also DESIGN EXAMPLE. The final appropriate filter for the application has then to be evaluated under operation in the target application by checking e.g. the change of the input ripple voltage.

© August 2026

20.2 Secondary Side Serial Connection

To generate a higher output voltage it is possible to put the outputs of the 17784123412 in series. It is common practice to connect an additional capacitor of 4.7uF (885012209048) between the +VOUT and -VOUT but it is not required.

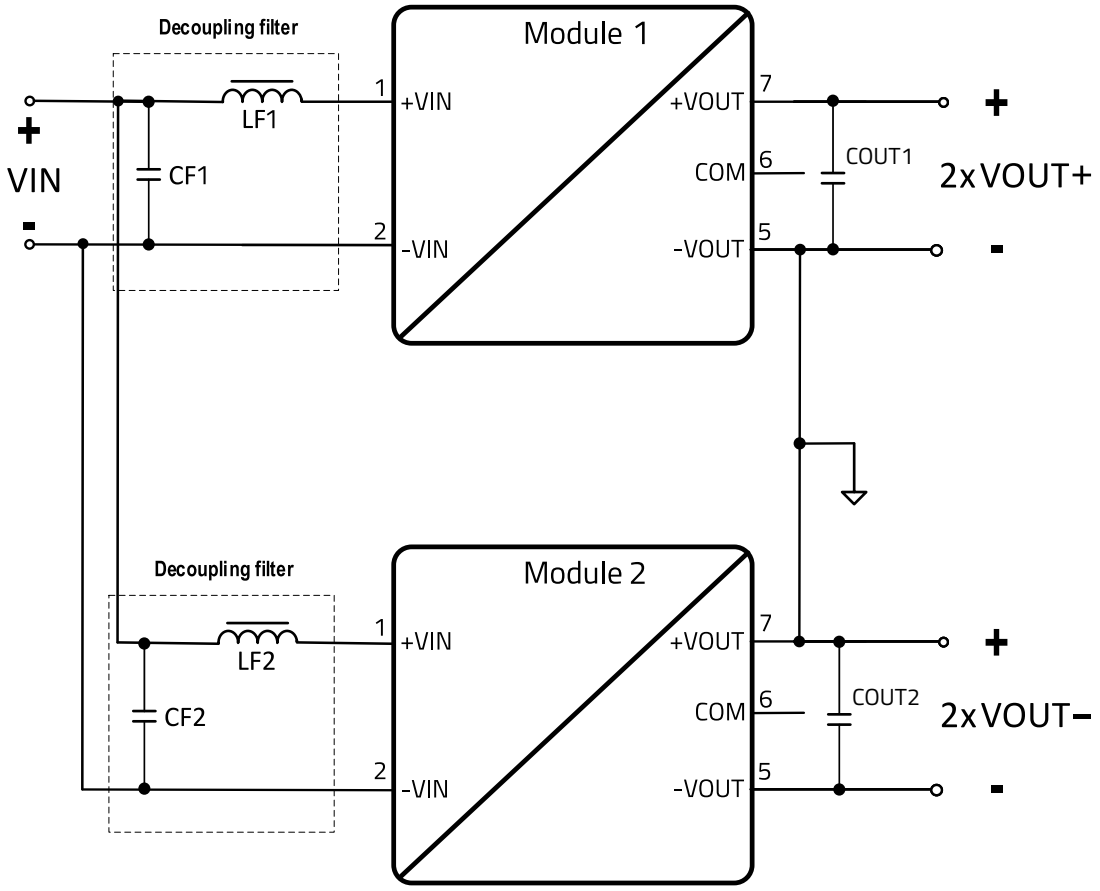

Figure 14: Secondary side serial connection.

In case of using long supply lines or different line length for each 17784123412 it is recommended to decouple each power module with an additional LC filter. The decoupling LC filter is also recommended for applications that have a high impedance dc bus as the supply to prevent high input voltage swings from being seen at the power module input. The EMI filter shown in DESIGN EXAMPLE can be used as an initial design. The final appropriate filter for the application should be evaluated under operation in the desired application.

© August 2026

20.3 Reverse Polarity Protection

A simple way of creating an input reverse polarity protection is to place a diode in series with the positive input line. Due to the forward voltage drop of the diode the application efficiency drops.

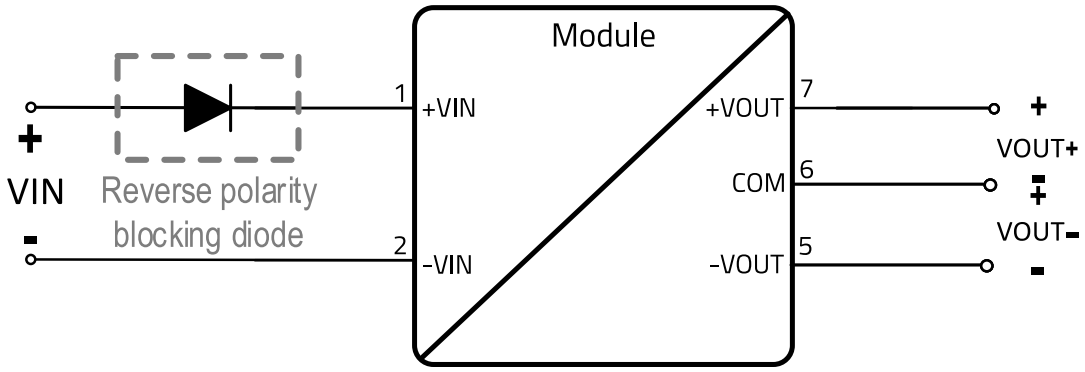

Figure 15: Reverse polarity protection.

© August 2026

21 HANDLING RECOMMENDATIONS

1. According to JEDECJ-STD033 an MSL classification is not applicable for THT components. Therefore the power module does not require special handling or storage to protect it from ambient moisture.
2. The profile below is valid for wave soldering only.

21.1 Solder Profile

Table 15: Wave solder profile according to EN61760-1:2006.

Profile Feature	Value
Final preheat temperature T_s	120°C
Preheat Time	70s
Ramp-up Rate ΔT from T_S to T_p	150°C max.
Peak temperature T_p	250°C-260°C
Time within peak temperature t_p	max. 10s max. 5s each wave
Ramp-down rate	-3.5°C/s
Time 25°C to 25 °C	4 minutes

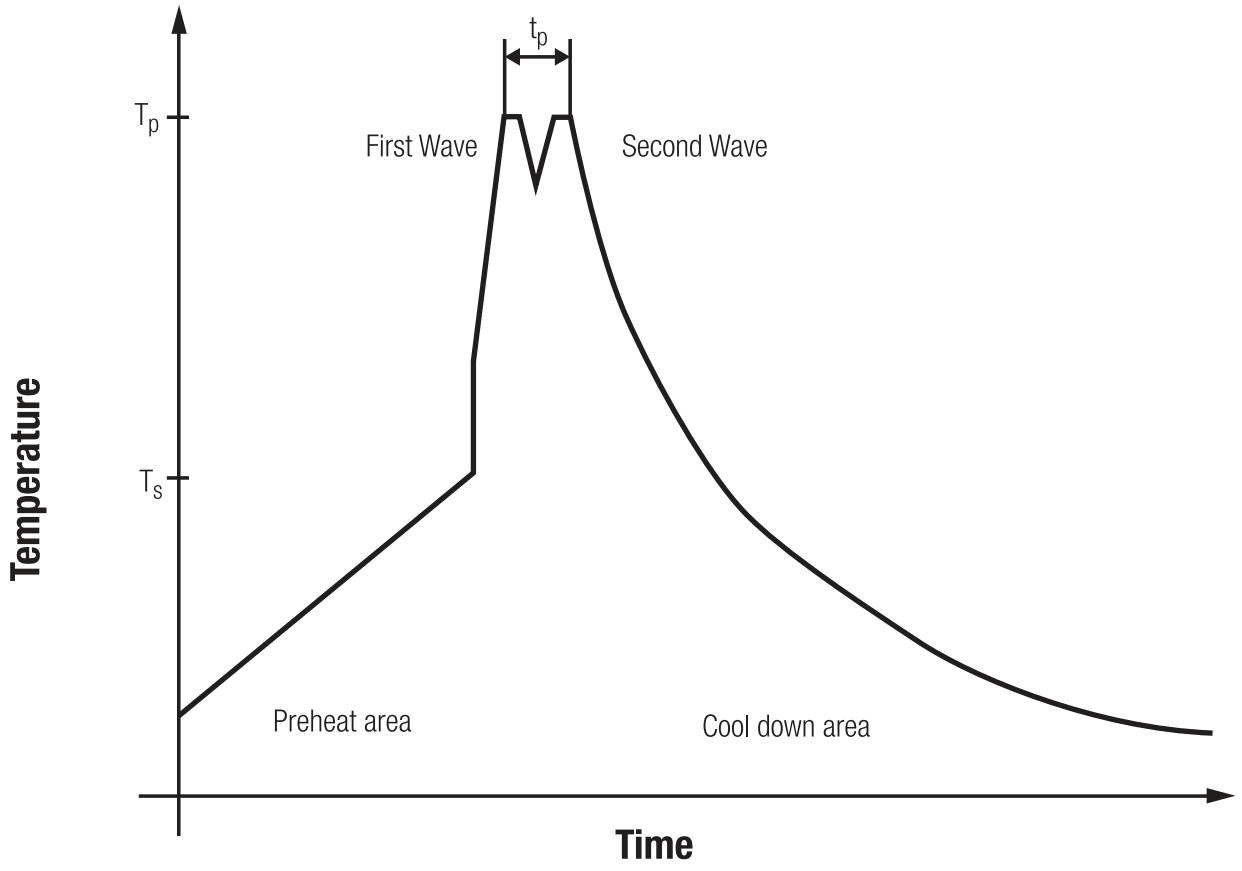

Figure 16: Wave solder profile according to EN61760-1:2006.

Manual Soldering

1. Maximum soldering temperature should not exceed 365°C±15°C.
2. Maximum soldering time: max. 3 seconds

© August 2026

22 PHYSICAL DIMENSIONS

22.1 Component

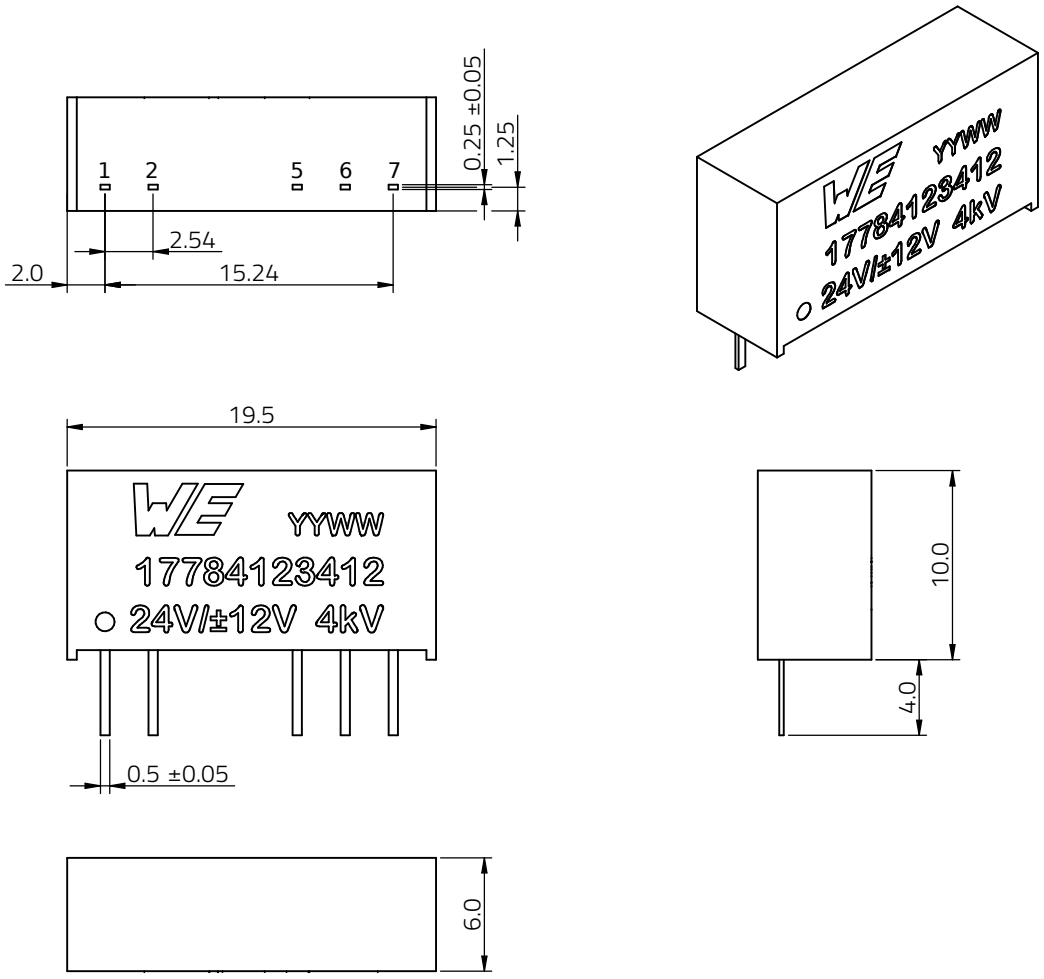

Figure 17: Physical dimensions.

All dimensions in mm
Tolerance: xx.x = ±0.5mm ; xx.xx = ±0.25mm unless otherwise noted

© August 2026

22.2 Recommended Drill Holes

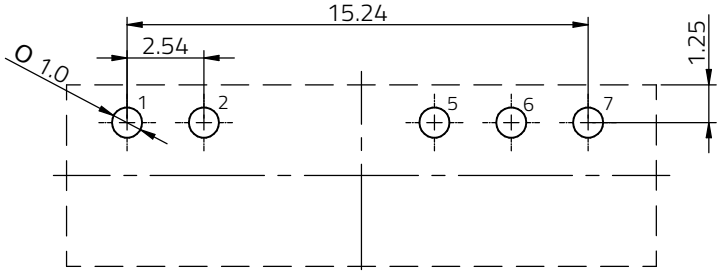

Figure 18: Recommended drill hole dimensions.

All dimensions in mm

© August 2026

22.3 Packaging

22.3.1 Tube

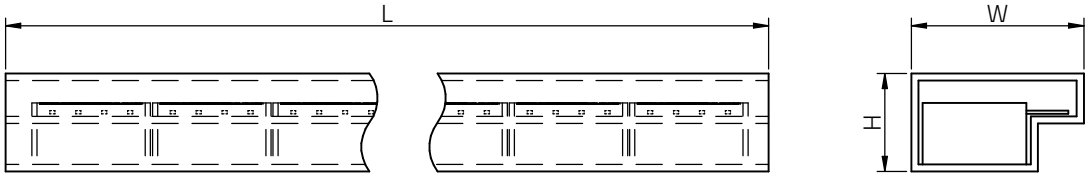

Figure 19: Tube dimensions.

Table 16: Packaging dimensions.

Tube dimension	L	W	H
Tolerance	typ.	typ.	typ.
Value	522mm	16.5mm	9.5mm

22.3.2 Carton

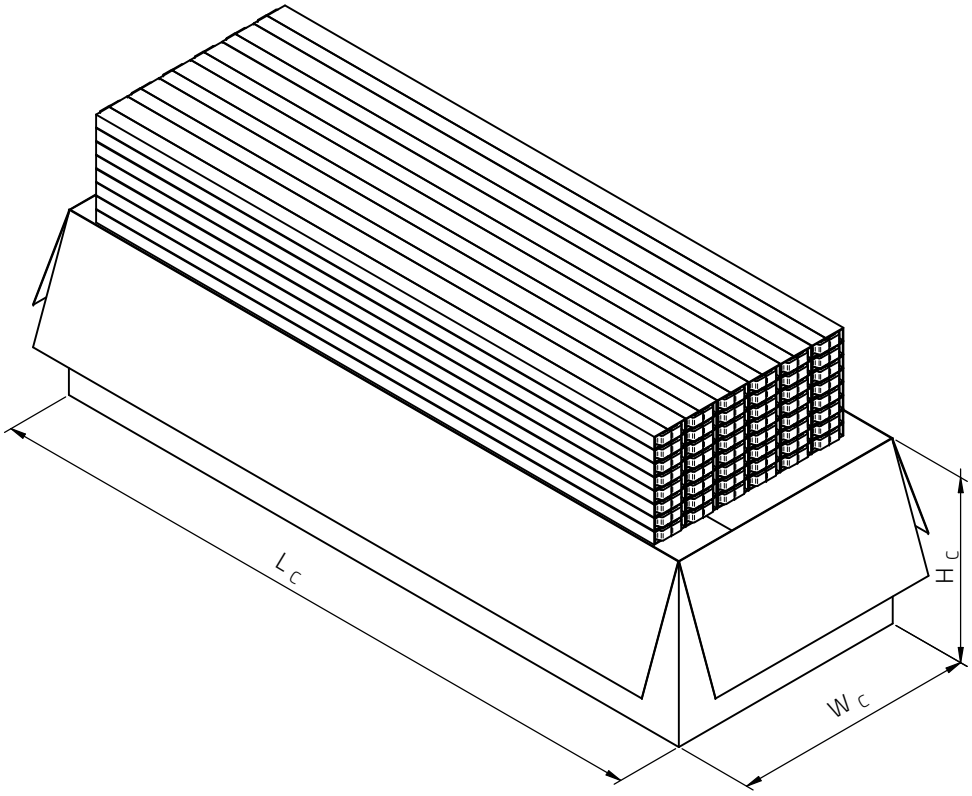

Figure 20: Carton dimensions.

Table 17: Carton dimensions.

Carton dimension	L_C	W_C	H_C
Tolerance	typ.	typ.	typ.
Value	570mm	20mm	15mm

© August 2026

23 DOCUMENT HISTORY

Table 18: Document history.

Revision	Date	Description	Comment
1.0	August 2026	Initial release of datasheet	

© August 2026

24 LIST OF FIGURES

1 Pinout. 4
2 Dielectric test setup. 10
3 Radiated EMI with input filter. 12
4 Conducted EMI with input filter. 12
5 Efficiency. 13
6 Dynamic power boost. 13
7 Power boost thermal derating. 14
8 Output voltage tolerance envelope both outputs. 14
9 Block diagram. 15
10 Short circuit protection. 16
11 Layout recommendation. 17
12 Design example schematic. 18
13 Decoupling for primary side parallel connection. 19
14 Secondary side serial connection. 20
15 Reverse polarity protection. 21
16 Wave solder profile according to EN61760-1:2006. 22
17 Physical dimensions. 23
18 Recommended drill hole dimensions. 24
19 Tube dimensions. 25
20 Carton dimensions. 25

© August 2026

25 LIST OF TABLES

1 Marking description. . . . 4
2 Pin description. . . . 4
3 Ordering information. . . . 5
4 Pinout compatible family members. . . . 5
5 Sales information. . . . 5
6 Absolute maximum rating. . . . 6
7 Operating conditions. . . . 6
8 Thermal specifications. . . . 6
9 Electrical specifications. . . . 7
10 Approvals. . . . 8
11 RoHS, REACH. . . . 8
12 Package specifications. . . . 8
13 Reliability. . . . 8
14 Design example bill of materials. . . . 18
15 Wave solder profile according to EN61760-1:2006.. . . . 22
16 Packaging dimensions. . . . 25
17 Carton dimensions. . . . 25
18 Document history. . . . 26

© August 2026

26 CAUTIONS AND WARNINGS

The following conditions apply to all goods within the product series of MagI³C of Würth Elektronik eiSos GmbH & Co. KG:

General:

- All recommendations according to the general technical specifications of the data-sheet have to be complied with.
- The usage and operation of the product within ambient conditions which probably alloy or harm the component surface has to be avoided.
- The responsibility for the applicability of customer specific products and use in a particular customer design is always within the authority of the customer. All technical specifications for standard products do also apply for customer specific products
- Residual washing varnish agent that is used during the production to clean the application might change the characteristics of the body, pins or termination. The washing varnish agent could have a negative effect on the long term function of the product. Direct mechanical impact to the product shall be prevented as the material of the body, pins or termination could flake or in the worst case it could break. As these devices are sensitive to electrostatic discharge customer shall follow proper IC Handling Procedures.
- Customer acknowledges and agrees that it is solely responsible for compliance with all legal, regulatory and safety-related requirements concerning its products, and any use of Würth Elektronik eiSos GmbH & Co. KG components in its applications, notwithstanding any applications-related information or support that may be provided by Würth Elektronik eiSos GmbH & Co. KG.
- Customer represents and agrees that it has all the necessary expertise to create and implement safeguards which anticipate dangerous consequences of failures, monitor failures and their consequences lessen the likelihood of failures that might cause harm and take appropriate remedial actions
- Customer will fully indemnify Würth Elektronik eiSos and its representatives against any damages arising out of the use of any Würth Elektronik eiSos GmbH & Co. KG components in safety-critical applications

Product specific:

Follow all instructions mentioned in the datasheet, especially:

- The solder profile has to comply with the technical reflow or wave soldering specification, otherwise this will void the warranty.
- All products are supposed to be used before the end of the period of 12 months based on the product date-code.
- Violation of the technical product specifications such as exceeding the absolute maximum ratings will void the warranty.
- It is also recommended to return the body to the original moisture proof bag and reseal the moisture proof bag again.
- ESD prevention methods need to be followed for manual handling and processing by machinery.

Disclaimer:

This electronic component has been designed and developed for usage in general electronic equipment only. This product is not authorized for use in equipment where a higher safety standard and reliability standard is especially required or where a failure of the product is reasonably expected to cause severe personal injury or death, unless the parties have executed an agreement specifically governing such use. Moreover Würth Elektronik eiSos GmbH & Co. KG products are neither designed nor intended for use in areas such as military, aerospace, aviation, nuclear control, submarine, transportation (automotive control, train control, ship control), transportation signal, disaster prevention, medical, public information network etc. Würth Elektronik eiSos GmbH & Co. KG must be informed about the intent of such usage before the design-in stage. In addition, sufficient reliability evaluation checks for safety must be performed on every electronic component which is used in electrical circuits that require high safety and reliability functions or performance. These cautions and warnings comply with the state of the scientific and technical knowledge and are believed to be accurate and reliable. However, no responsibility is assumed for inaccuracies or incompleteness.

© August 2026

27 IMPORTANT NOTES

General Customer Responsibility

Some goods within the product range of Würth Elektronik eiSos GmbH & Co. KG contain statements regarding general suitability for certain application areas. These statements about suitability are based on our knowledge and experience of typical requirements concerning the areas, serve as general guidance and cannot be estimated as binding statements about the suitability for a customer application. The responsibility for the applicability and use in a particular customer design is always solely within the authority of the customer. Due to this fact it is up to the customer to evaluate, where appropriate to investigate and decide whether the device with the specific product characteristics described in the product specification is valid and suitable for the respective customer application or not. Accordingly, the customer is cautioned to verify that the datasheet is current before placing orders.

Customer Responsibility Related to Specific, in Particular Safety-Relevant, Applications

It has to be clearly pointed out that the possibility of a malfunction of electronic components or failure before the end of the usual lifetime cannot be completely eliminated in the current state of the art, even if the products are operated within the range of the specifications. In certain customer applications requiring a very high level of safety and especially in customer applications in which the malfunction or failure of an electronic component could endanger human life or health it must be ensured by most advanced technological aid of suitable design of the customer application that no injury or damage is caused to third parties in the event of malfunction or failure of an electronic component.

Best Care and Attention

Any product-specific notes, warnings and cautions must be strictly observed. Any disregard will result in the loss of warranty.

Customer Support for Product Specifications

Some products within the product range may contain substances which are subject to restrictions in certain jurisdictions in order to serve specific technical requirements. Necessary information is available on request. In this case the field sales engineer or the internal sales person in charge should be contacted who will be happy to support in this matter.

Product R&D

Due to constant product improvement product specifications may change from time to time. As a standard reporting procedure of the Product Change Notification (PCN) according to the JEDEC-Standard we inform about minor and major changes. In case of further queries regarding the PCN, the field sales engineer or the internal sales person in charge should be contacted. The basic responsibility of the customer as per Section 1 and 2 remains unaffected.

Product Life Cycle

Due to technical progress and economical evaluation we also reserve the right to discontinue production and delivery of products. As a standard reporting procedure of the Product Termination Notification (PTN) according to the JEDEC Standard we will inform at an early stage about inevitable product discontinuance. According to this we cannot guarantee that all products within our product range will always be available. Therefore it needs to be verified with the field sales engineer or the internal sales person in charge about the current product availability expectancy before or when the product for application design-in disposal is considered. The approach named above does not apply in the case of individual agreements deviating from the foregoing for customer-specific products.

Property Rights

All the rights for contractual products produced by Würth Elektronik eiSos GmbH & Co. KG on the basis of ideas, development contracts as well as models or templates that are subject to copyright, patent or commercial protection supplied to the customer will remain with Würth Elektronik eiSos GmbH & Co. KG. Würth Elektronik eiSos GmbH & Co. KG does not warrant or represent that any license, either expressed or implied, is granted under any patent right, copyright, mask work right, or other intellectual property right relating to any combination, application, or process in which Würth Elektronik eiSos GmbH & Co. KG components or services are used.

General Terms and Conditions

Unless otherwise agreed in individual contracts, all orders are subject to the current version of the "General Terms and Conditions of Würth Elektronik eiSos Group", last version available at www.we-online.com.

© August 2026